Limit Switchs

TZ-8 Limit switch

Features

- Double circuit type of limit switch
- Highly rigid construction, consists of intensive plastic and aluminum cast (Head and cover snugly fit in box)
- Small volume, water-proof and oil-proof construction
- Built-in basic switch with double spring mechanism, longer mechanical life
- Smooth operation with greater OT
- Easy-to-wire circuit opening design
- Wide varity of actuators, easily use

Contact Form

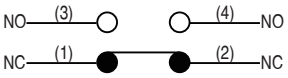

Contact Form

Rated voltage	Noninductive Load(A)				Inductive Load(A)			
	Resistance Load		Lamp Load		Inductive Load		Motor Load	
	NC	NO	NC	NO	NC	NO	NC	NO
125VAC 250VAC 500VAC	5 5	5 5	1.5 1	0.7 0.5	3 3	3 3	2 1.5	1 0.8
8VDC 14VDC 30VDC 125VDC 250VDC	5 5 5 0.4 0.2	5 5 5 0.4 0.2	3 3 3	3 3 3	5 4 4	4 4 4	3 3 3	3 3 3
Inrush Current	N.C: below 24A, N.O: below 12A							

NOTES:

- Inductive load has a power factor of 0.4 min.(AC) and a time constant of 7 msec.max.(DC).
- Lamp load has an inrush current of 10 times the steady-state current,while motor load has an
- inrush current of 6 times the steady-state current.

Contact Form

Operation speed	0.5mm-50cm/sec
Operating frequency	Mechanical: 120 operations/minute Electical: 30 operations/ minute
Contact resistance	25mΩmax. (initial value)
Insulation resistance	100mΩmin. at 500VDC
Dielectric strength	1000VAC, 50/60 HZ for 1 minute between terminals of the same polarity
	1500VAC, 50/60 HZ for 1 minute between currentcarrying and non-current-carrying metal parts
	1500VAC, 50/60 HZ for 1 minute between each terminal and ground
Vibration	10-55HZ,1.5mm double amplitude
Shock	Mechanical durable: 1, 000m/Sec^2 (about 100G'S) Malfunction: 300m/Sec^2 (about 30G'S)
Ambient temperature	-5℃to +65℃
Humidity	<95% RH
Life	Mechanical: 10,000,000 operations above Electrical: 500,000 operations above
Weight	About 130 to 190g
Degree of protection	IP65

Operating characteristics

Models	TZ-8104	TZ-8108	TZ-8107	TZ-8111	TZ-8112/8122	TZ-8166/8167/8168/8169
OF Max.	750g	750g	750g	900g	900g	150g
RF Min.	100g	100g	750g	150g	150g	-
PT Max.	20°	20°	20°	1.5mm	1.5mm	30mm
OT Min.	50°	50°	50°	4mm	4mm	-
MD Max.	12°	12°	12°	1mm	1mm	-
OP	-	-	-	26±0.8mm	37±0.8mm	

Appearance and dimension

TZ-8104

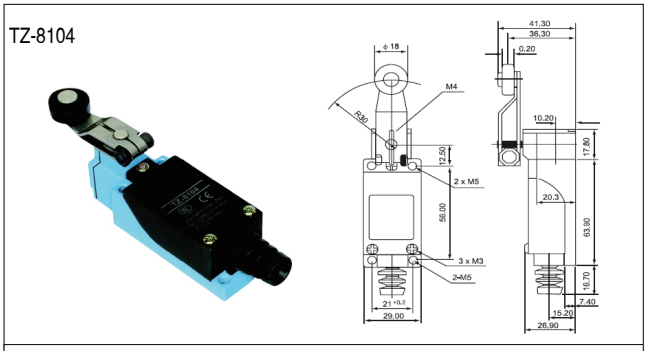

TZ-8108

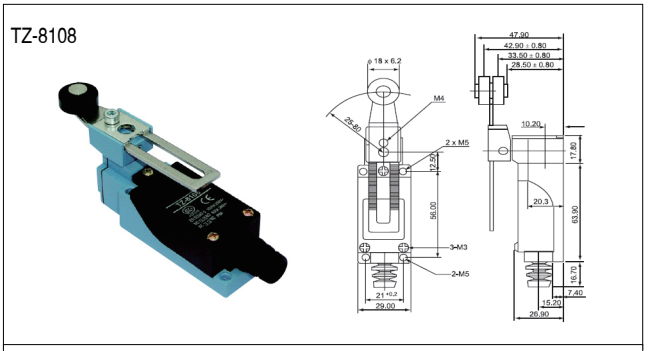

TZ-8107

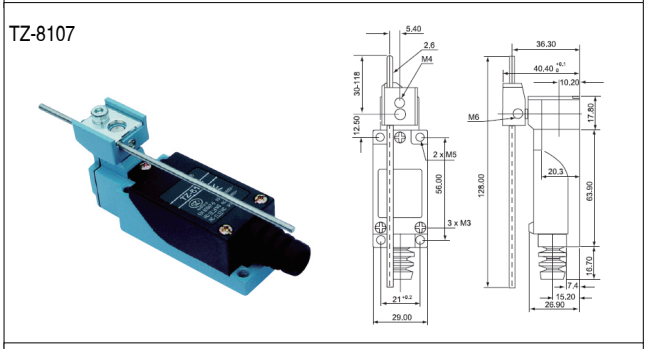

TZ-8112

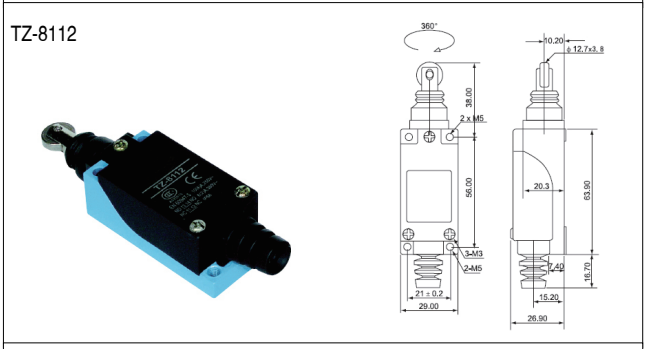

TZ-8111

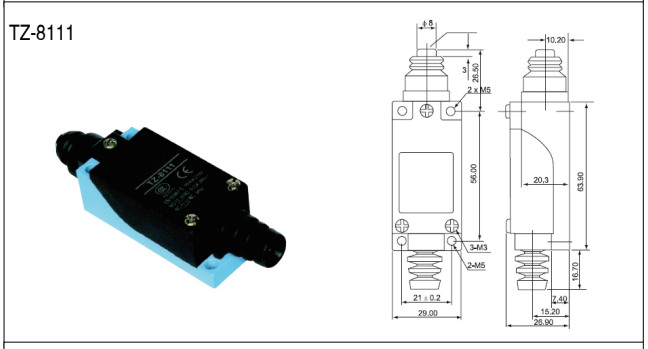

TZ-8122

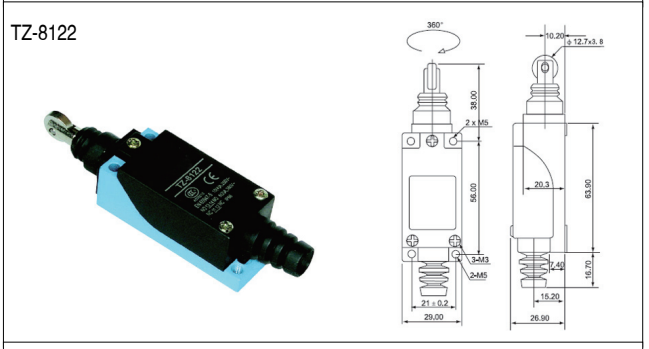

TZ-8166

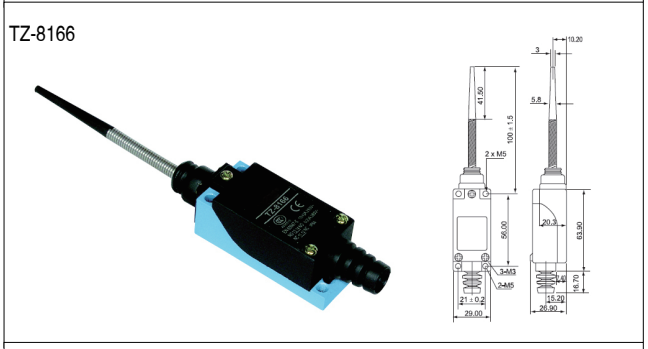

TZ-8167

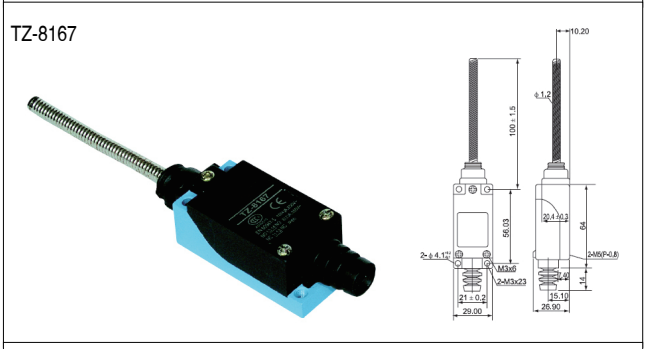

TZ-8168

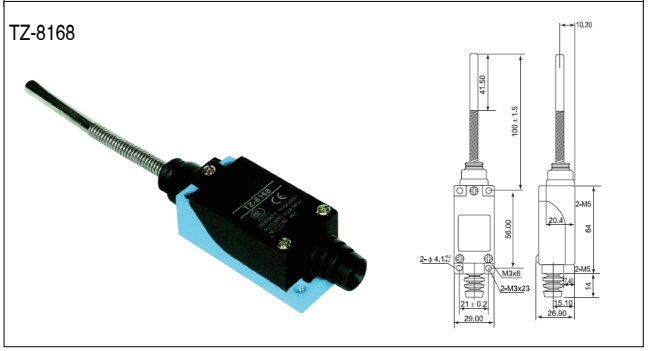

TZ-8169

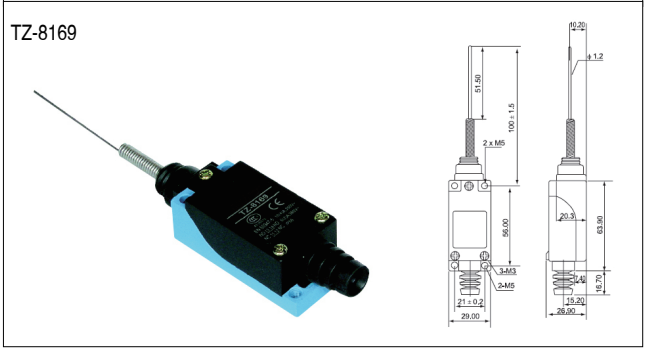

Limit Switchs

CSA Limit switch

Features

- Strong metal outer shell, swing arm max.±95°
- Long life (20, 000, 000 mechanical operations)
- Stainless steel idler wheel, punch and spring
- Selective PG11 cable gland

Specifications

Model	CSA	CSA-001	CSA-003	CSA-012	CSA-021	CSA-031	CSA-061	CSA-071	CSA-081
Operating force	OF Max	800g	800g	800g	400g-cm	400g-cm	150g	150g	150g
Release force	RF Min	400g	400g	400g	100g-cm	100g-cm	50g	50g	50g
Pre-travel	PT Max	1.8mm	1.8mm	1.8mm	20°	20°	30mm	30mm	30mm
Tripping position	TP ± 10%	2.0mm	2.0mm	2.0mm	22.5°	22.5°	22.5°	22.5°	22.5°
Movement differential	MD Max	1.2mm	1.2mm	1.2mm	10°	10°	14°	14°	14°
Over travel	OT Min	4.0mm	4.0mm	4.0mm	75°	75°	20mm	20mm	20mm
Total travel	TT Min	5.8mm	5.8mm	5.8mm	95°	95°	50mm	50mm	50mm
Rotary indexing					22.5°	22.5°			

Characteristics

Double Break Mechanism	INO+INC Force Break snap action
Rated Voltage / Current	10(4)A, 125, 250VAC / 6(2)A, 380VAC For inductance Load, Cos Φ=0.4
Contact Resistance	25mΩmax. (initial value)
Insultation Resistance	100mΩmin. (at 500VDC)
Dielectric Strength	1000VAC, 50/60 HZ for 1 minute between terminals of the same polarity
	1500VAC, 50/60 HZ for 1 minute between current-carrying and non-current-carrying metal parts
	1500VAC, 50/60 HZ for 1 minute between each terminal and ground
Electrical Life	500,000 at 10A 250VAC Resistive
Mechanical Life	10, 000, 000 operations min. (under rated conditions)
Operating Speed	5mm/s to 0.5m/s
Degree of Protection	IP65
Ambient Temperature Rised	Max 30℃over ambient temperature at rated voltage/current
Conformed Standards	Cenelec EN 50041, EN 50047, IEC 337-1, VDE 0660
Operating Temperature	-5℃~+65℃(with no icing)
Storage Temperature	-5℃~+65℃(with no icing)
Ambient Operating Humdity	95℃ RH Max.
Shock Resistance	Mechanical durable: 1000m/s^2 min.
	Malfunction: 300m/s^2 min.
Vibration Frequency	Malfunction: 10 to 55HZ, 1.5mm double amplitude
Terminal Screw Torsional Force	6-8 kgf-cm
Other Screw Torsional Force	Cover 12-14 kgf-cm/Head 8-9 kgf-cm/Mounting 50-60 kgf/cm
Bare Wire Diameter	Φ2Max
Cable Diameter	Φ12 Max(IP 65 if use cable Φ8-9)

Appearance and dimension

CSA-001

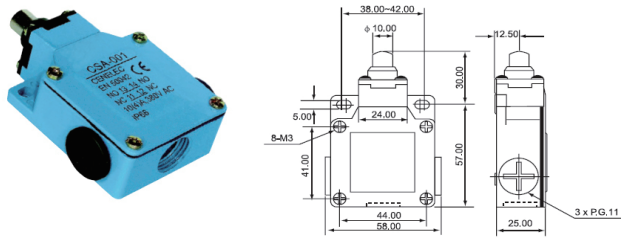

CSA-003

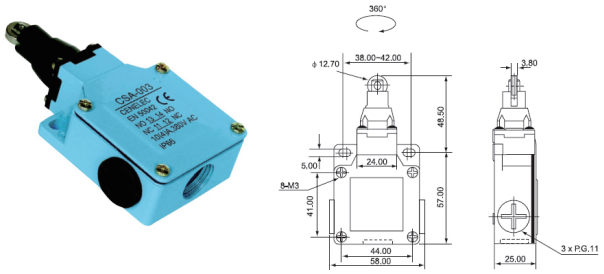

CSA-012

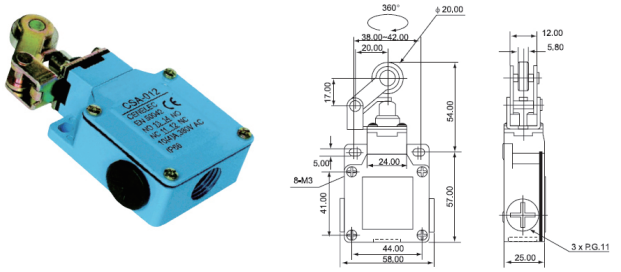

CSA-031

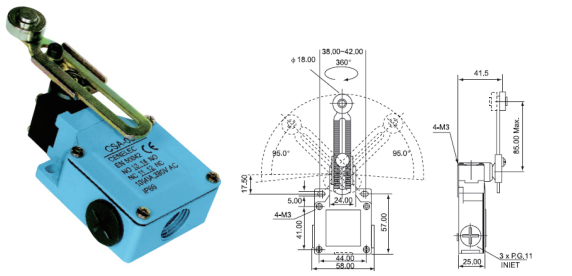

CSA-021

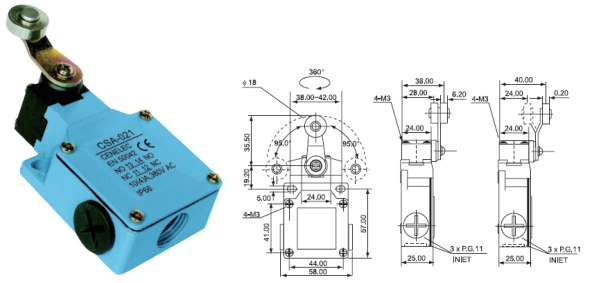

CSA-061

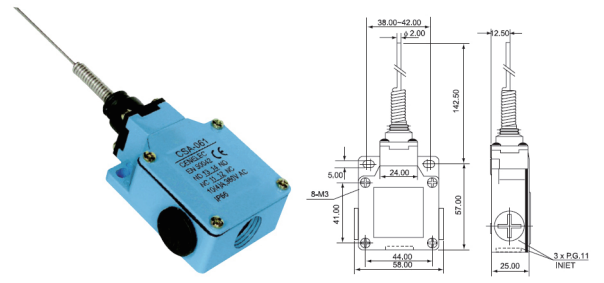

CSA-071

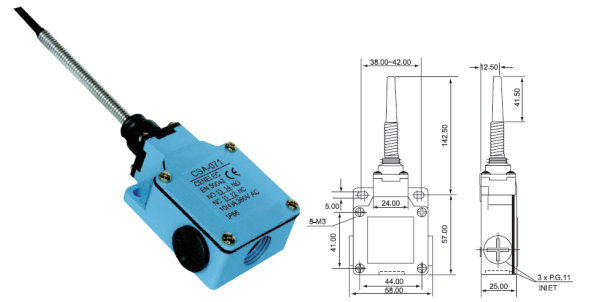

CSA-081

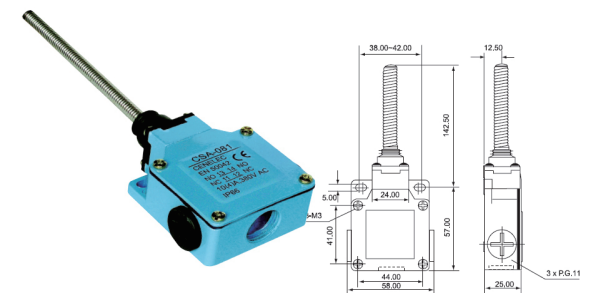

Limit Switchs

CLS Limit switch

Features

- Economical & plastic type
- Stainless steel roller, punch and spring
- Swing amplitude, extra large 95°
- PG13.5 cable gland that can be equipped.

Electrical life

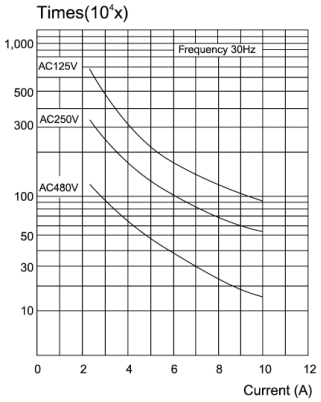

Specifications

Model	CLS	101 301	103 303	111 311	121 321	127 327	131 331	161 361	171 371	181 381	191 391
Operating force	OF Max	700g	700g	700g	500g	700g	500g-cm	100g	100g	100g	500g-cm
Release force	RF Min	200g	200g	200g	100g-cm	200g	100g-cm	40g	40g	40g	100g-cm
Pre-travel	PT Max	1.8mm	1.8mm	1.8mm	20°	1.8mm	20°	30mm	30mm	30mm	20°
Tripping position	TP ± 10%	2.0mm	2.0mm	2.0mm	22.5°	2.0mm	22.5°	22.5°	22.5°	22.5°	22.5°
Movement differential	MD Max	1.2mm	1.2mm	1.2mm	10°	1.2mm	10°	14°	14°	14°	10°
Over travel	OT Min	4.0mm	4.0mm	4.0mm	75°	4.0mm	75°	20mm	20mm	20mm	75°
Total travel	TT Min	5.8mm	5.8mm	5.8mm	95°	5.8mm	95°	50mm	50mm	50mm	95°
Rotary indexing					22.5°		22.5°				

Characteristics

Double Break Mechanism	INO+INC Force Break snap action
Rated Voltage / Current	10(4)A, 125, 250VAC / 6(2)A, 380VAC For inductance Load, Cos = Φ 0.4
Contact Resistance	25mΩ max. (initial value)
Insultation Resistance	100mΩ min. (at 500VDC)
Dielectric Strength	1000VAC, 50/60 HZ for 1 minute between terminals of the same polarity
	1500VAC, 50/60 HZ for 1 minute between current-carrying and non-current-carrying metal parts
	1500VAC, 50/60 HZ for 1 minute between each terminal and ground
Electrical Life	500,000 at 10A 250VAC Resistive
Mechanical Life	10, 000, 000 operations min. (under rated conditions)
Operating Speed	5mm/s to 0.5m/s
Degree of Protection	IP65
Ambient Temperature Rised	Max 30℃over ambient temperature at rated voltage/current
Conformed Standards	Cenelec EN 50041, EN 50047, IEC 337-1, VDE 0660
Operating Temperature	-5℃~+65℃(with no icing)
Storage Temperature	-5℃~+65℃(with no icing)
Ambient Operating Humdity	95℃ RH Max.
Shock Resistance	Mechanical durable: 1000m/s^2 min.
	Malfunction: 300m/s^2 min.
Vibration Frequency	Malfunction: 10 to 55HZ, 1.5mm double amplitude
Terminal Screw Torsional Force	6-8 kgf-cm
Other Screw Torsional Force	Cover 12-14 kgf-cm/Head 8-9 kgf-cm/Mounting 50-60 kgf/cm
Bare Wire Diameter	Φ 2Max
Cable Diameter	Φ 12 Max(IP 65 if use cable Φ 8-9)

Appearance and dimension

CLS-101

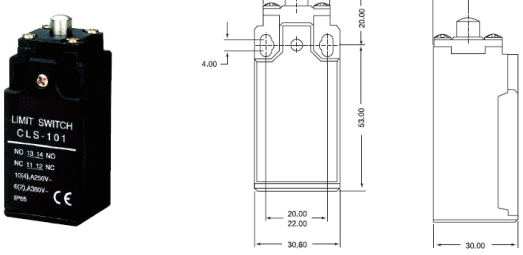

CLS-131

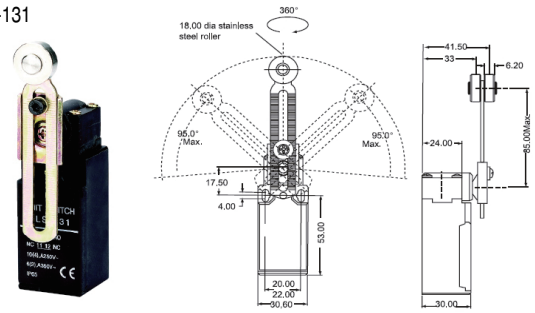

CLS-103

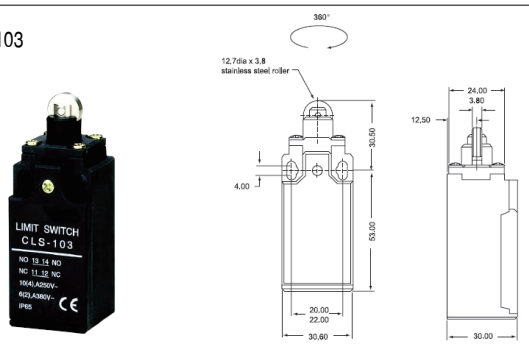

CLS-161

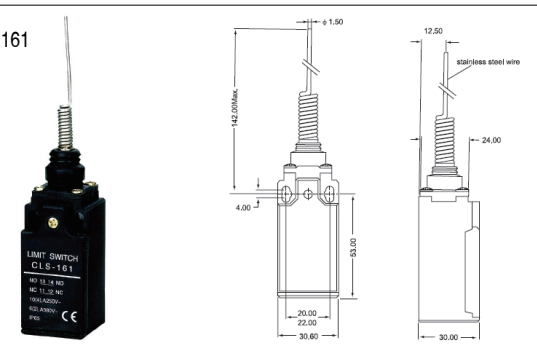

CLS-111

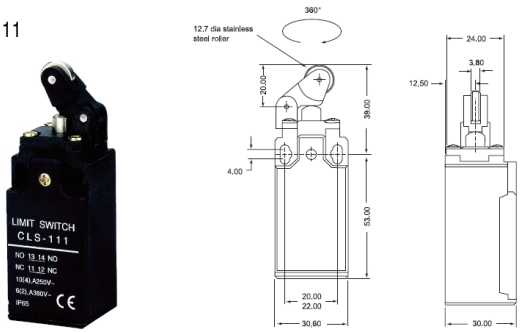

CLS-17

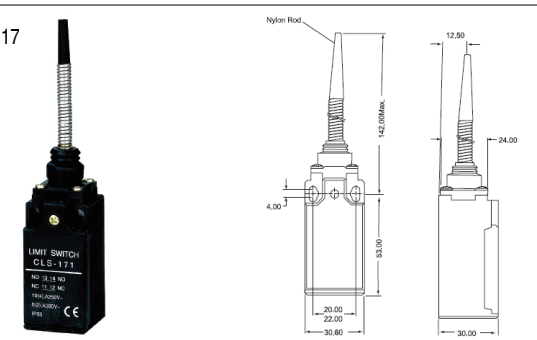

CLS-121

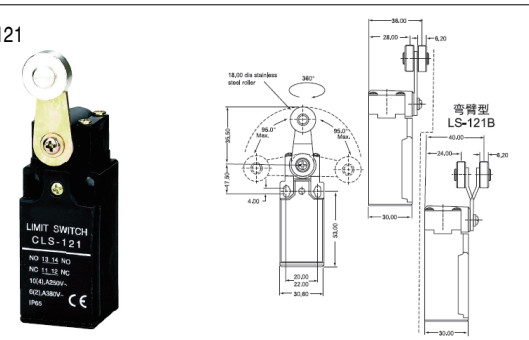

CLS-181

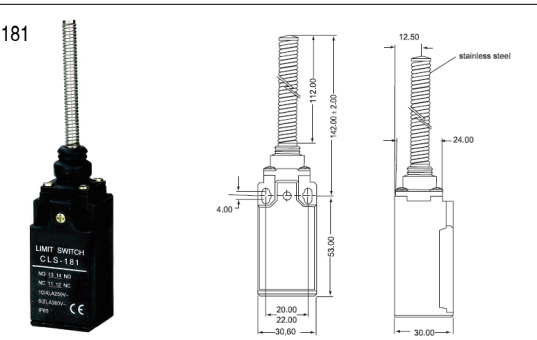

Appearance and dimension

CLS-301

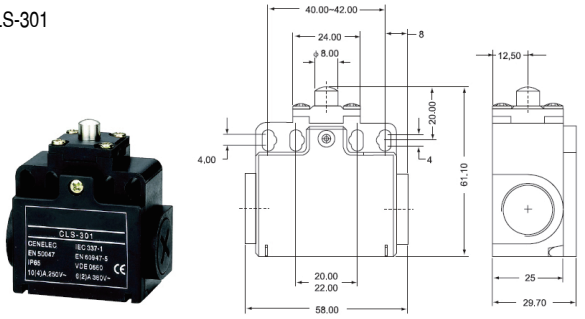

CLS-331

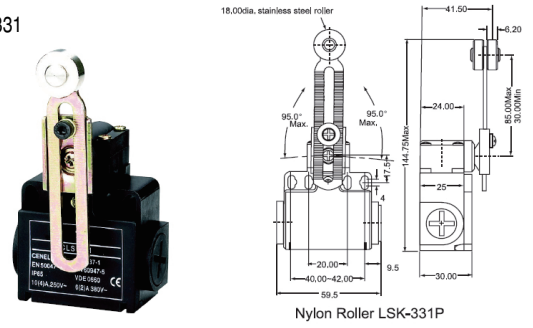

Nylon Roller LSK-331P

CLS-303

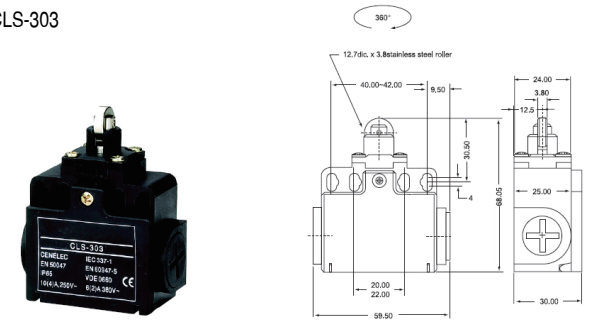

CLS-361

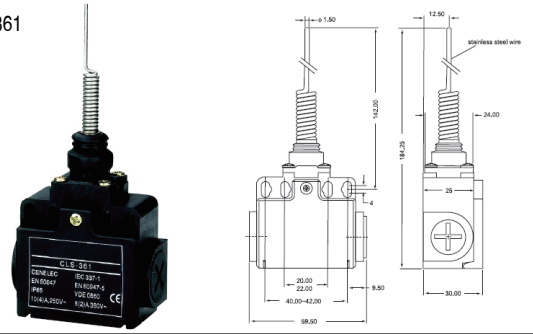

CLS-311

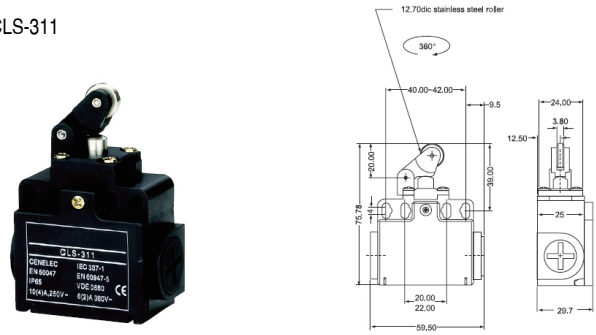

CLS-371

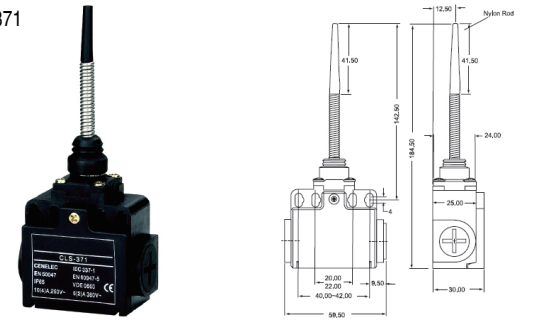

CLS-321

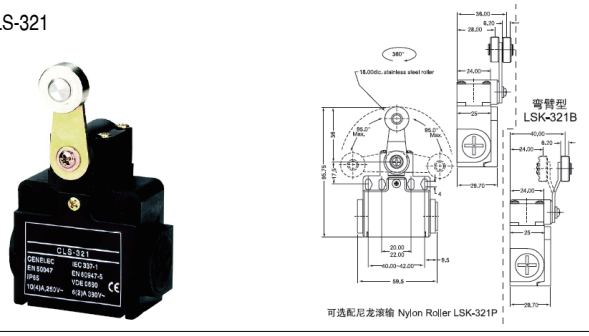

可选尼龙滚轮 Nylon Roller LSK-321P

CLS-381

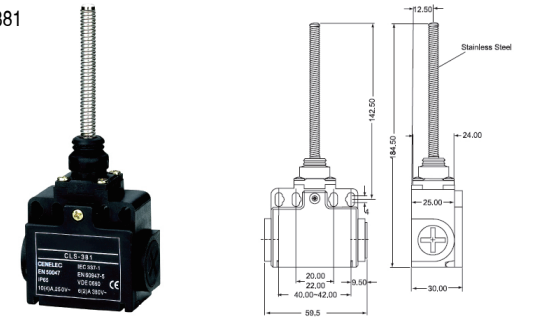

CLS-327

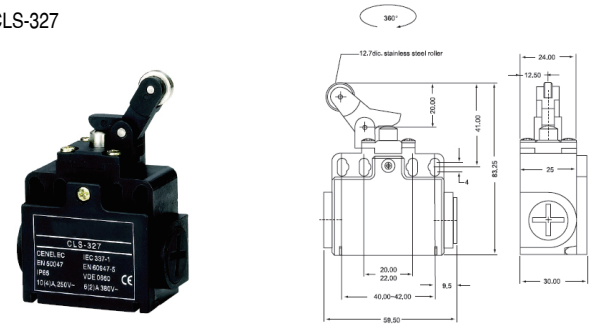

CLS-391

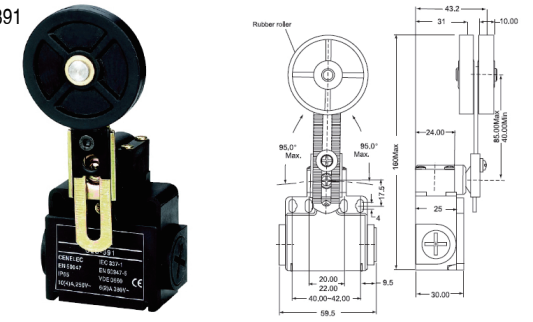

Limit Switchs

CWL Limit switch

Features

- Double-circuit type of limit switch, is widely used
- With strong aluminum cast outer shell
- High mechanical strength
- Water-proof, oil-proof construction
- Structure preventing oil, water and pressure
- Indicating plate with setting position is installed in it, so it is easy to maintain
- Various of actuators is taken convenience for using
- Built-in contact stand has double-spring, so it has long mechanical life

Contact Form

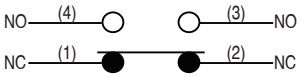

Contact Form

Rated voltage	Noninductive Load(A)				Inductive Load(A)			
	Resistance Load		Lamp Load		Inductive Load		Motor Load	
	NC	NO	NC	NO	NC	NO	NC	NO
125VAC	10		3	1.5	10		5	2.0
250VAC	5		2	1	5		3	1.0
480VAC	3		1.5	0.8	3		1.5	0.8
600VAC	2		1	0.5	1.5		1	0.5
8VDC	10		6	3	10		6	
14VDC	10		6	3	10		6	
30VDC	6		4	3	6		4	
125VDC	0.8		0.2	0.2	0.8		0.2	
250VDC	0.4		0.1	0.1	0.4		0.1	
Inrush Current	N.C: below 24A, N.O: below 12A							

NOTES:

- Inductive load has a power factor of 0.4 min.(AC) and a time constant of 7 msec.max.(DC).
- Lamp load has an inrush current of 10 times the steady-state current,while motor load has an
- inrush current of 6 times the steady-state current.

Contact Form

Operation speed	1mm-2m/s
Operating frequency	Mechanical: 120 operations/minute Electical: 30 operations/ minute
Contact resistance	15mΩmax. (initial value)
Insulation resistance	100mΩabove at (500VDC)
Dielectric strength	1000VAC, 50/60 HZ for 1 minute between terminals of the same polarity
	1500VAC, 50/60 HZ for 1 minute between currentcarrying and non-current-carrying metal parts
	1500VAC, 50/60 HZ for 1 minute between each terminal and ground
Vibration	10-55HZ,1.5mm double amplitude
Shock	Mechanical durable: 1, 000m/Sec^2 (about 100G'S) Malfunction: 300m/Sec^2 (about 30G'S)
Ambient temperature	-10℃to℃+80
Humidity	<95% RH
Life	Mechanical: 15,000,000 operations above (under rated OT) Electrical: 500,000 operations above
Weight	About 275g
Degree of protection	IP67

Operating characteristics

Models	CWLCA2-2	CWLD2	CWLNJ	CWLNJ-S2	CWLCA12-2-Q	CWLCL	CWLCA32-41	CWLD	CWLNJ-2	CWLNJ-30	CWLD1	CWLD3
OF Max.	1360g	2720g	150g	29g	1360g	142g	1200g	2720g	120g	80g	2720g	2720g
RF Min.	227g	910g	-	-	227g	28g	-	910g	-	-	910g	910g
PT Max.	20°	1.7mm	28mm	28mm	20°	20°	55°	1.7mm	28mm	28mm	1.7mm	1.7mm
OT Min.	30°	5.6mm	-	-	30°	30°	35°	6.4mm	-	-	5.6mm	5.6mm
MD Max.	12°	1mm	-	-	12°	12°	-	1mm	-	-	1mm	1mm
TF Max	2720g	-	-	-	2720g	200g	-	-	-	-	2720g	2720g
TT Min	50°	6.5±0.8 mm	-	-	50°	50°	OP:90±10°	OP:34± 2.8mm	-	-	6.5±0.8 mm	9±0.8mm

http://www.greegoo.com

Appearance and dimension

CWLCA2-2

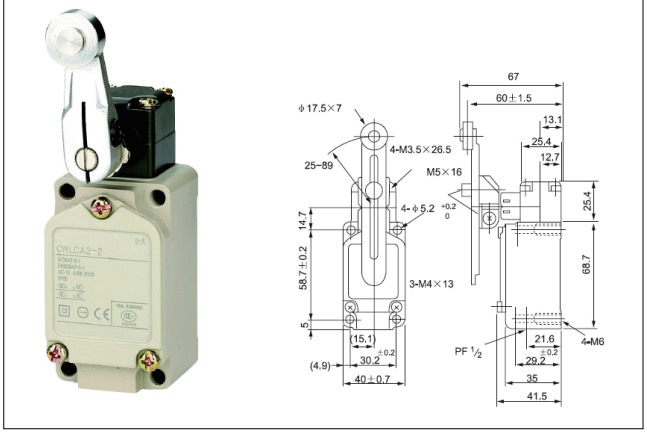

CWLCA12-2-Q

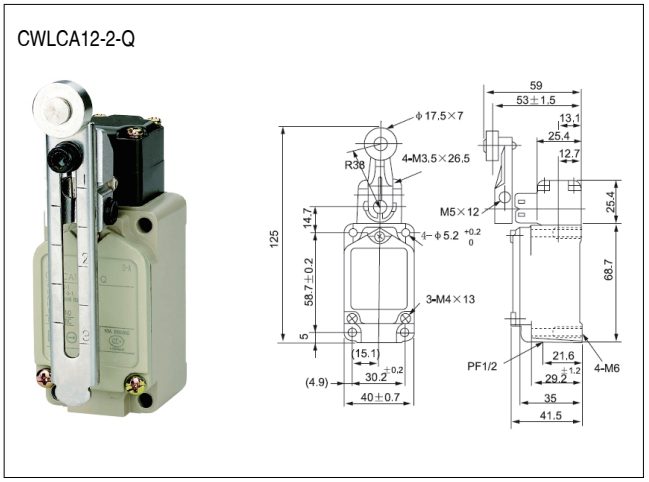

CWLCA3241

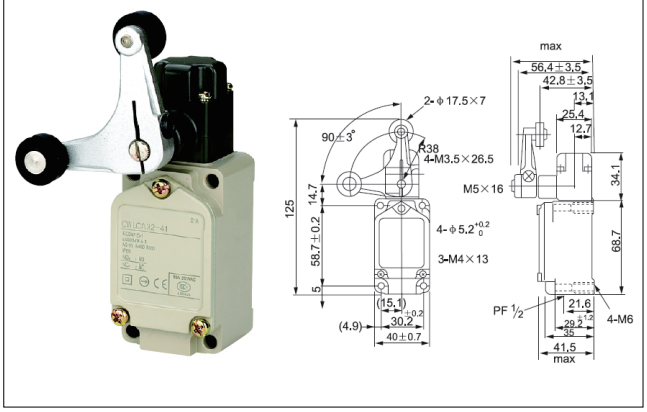

CWLCL

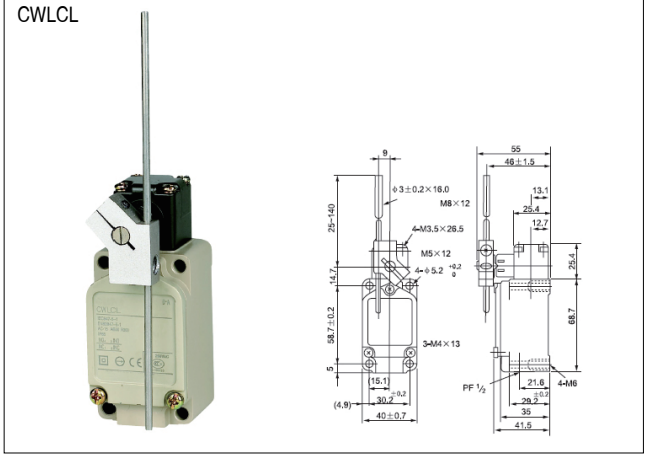

CWLD

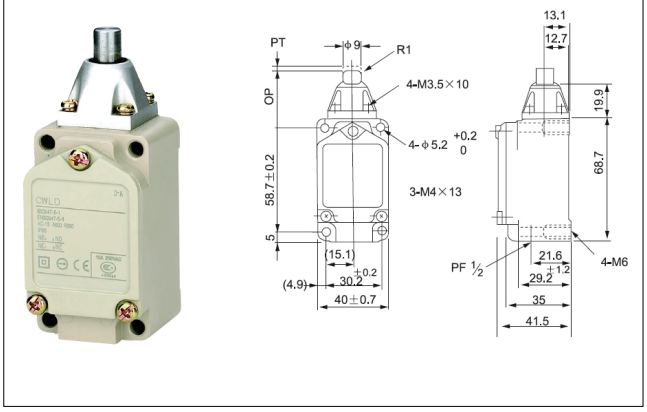

CWLD1

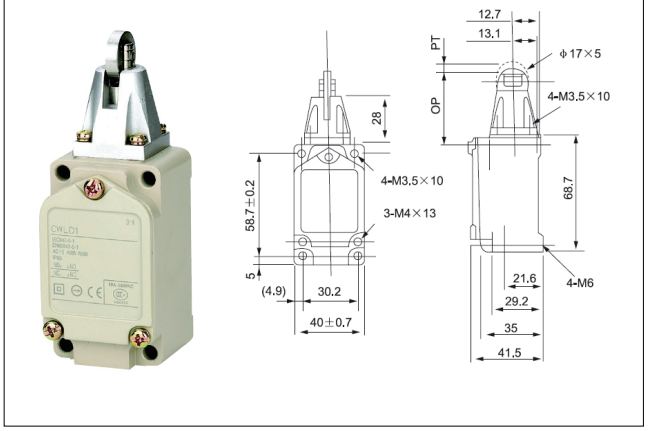

Appearance and dimension

CWLD2

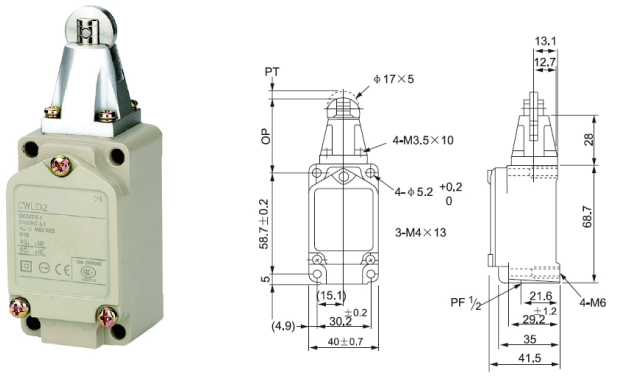

CWLD3

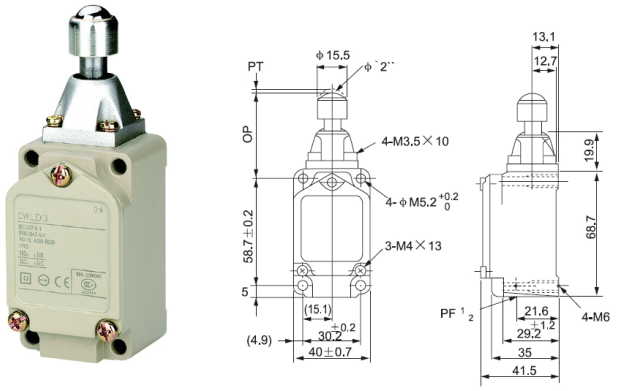

CWLNJ

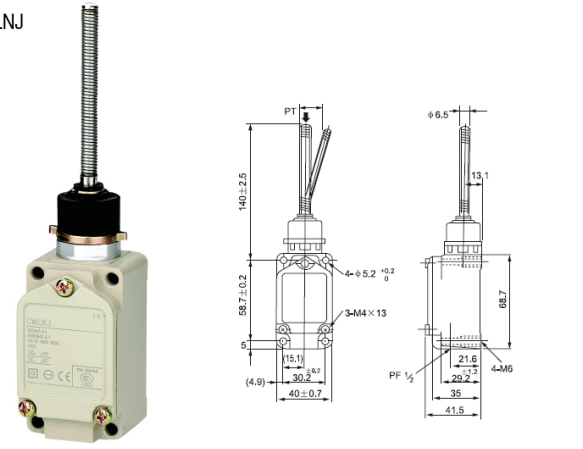

CWLNJ-30

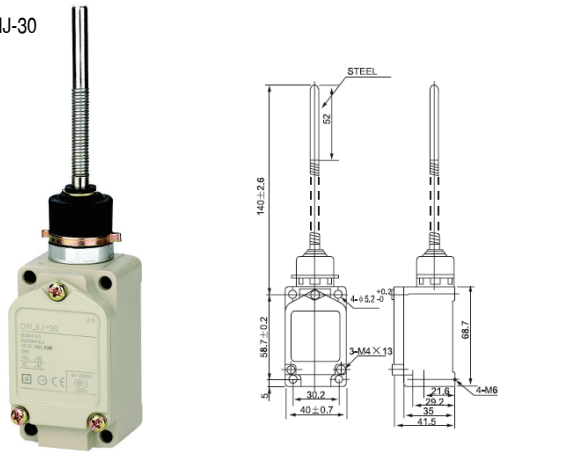

CWLNJ-2

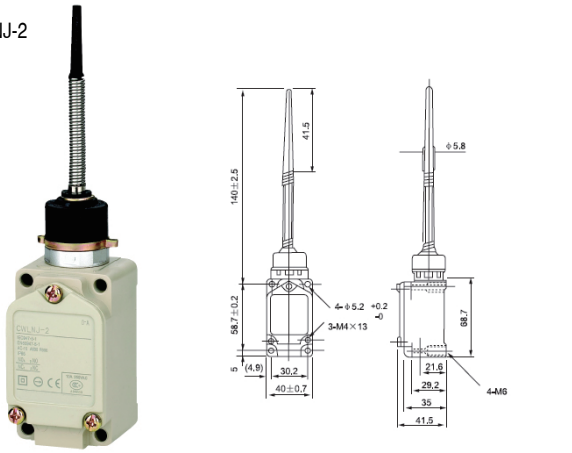

CWLNJ-S2

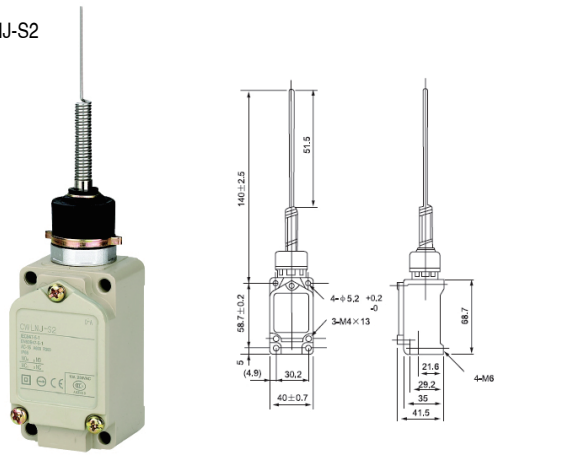

Limit Switchs

CHL Limit switch

Features

- Metallic bottom shell
- Stainless steel roller, punch and spring
- Strong electric property 10A, 250V, for 500,000 times

Electrical life

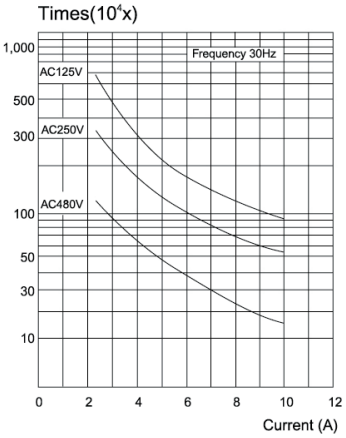

Specifications

Model	CHL	5000	5030	5050	5100	5200	5220	5300	5330	5381	5391
Operating force	OF Max	750g-cm	750g-cm	750g-cm	750g-cm	900g-cm	900g-cm	150g	150g	150g	550g-cm
Release force	RF Min	100g-cm	100g-cm	100g-cm	200g	200g	200g	30g	30g	30g	100g-cm
Pre-travel	PT Max	20°	20°	20°	1.8mm	1.8mm	1.8mm	30mm	30mm	30mm	20°
Tripping position	TP ± 10%	22.5°	22.5°	22.5°	2.0mm	2.0mm	2.0mm°	22.5°	22.5°	22.5°	22.5°
Movement differential	MD Max	10°	10°	10°	1.2mm	1.2mm	1.2mm	14°	14°	14°	14°
Over travel	OT Min	75°	75°	75°	4.0mm	4.0mm	4.0mm	20mm	20mm	20mm	75°
Total travel	TT Min	95°	95°	95°	5.8mm	5.8mm	5.8mm	50mm	50mm	50mm	95°

Characteristics

Double Break Mechanism	INO+INC Force Break snap action
Rated Voltage / Current	10(4)A, 125, 250VAC / 6(2)A, 380VAC For inductance Load, Cos Φ=0.4
Contact Resistance	25mΩmax. (initial value)
Insultation Resistance	100mΩmin. (at 500VDC)
Dielectric Strength	1000VAC, 50/60 HZ for 1 minute between terminals of the same polarity
	1500VAC, 50/60 HZ for 1 minute between current-carrying and non-current-carrying metal parts
	1500VAC, 50/60 HZ for 1 minute between each terminal and ground
Electrical Life	500,000 at 10A 250VAC Resistive
Mechanical Life	10, 000, 000 operations min. (under rated conditions)
Operating Speed	5mm/s to 0.5m/s
Degree of Protection	IP65
Ambient Temperature Rised	Max 30℃over ambient temperature at rated voltage/current
Conformed Standards	Cenelec EN 50041, EN 50047, IEC 337-1, VDE 0660
Operating Temperature	-5℃~+65℃(with no icing)
Storage Temperature	-5℃~+65℃(with no icing)
Ambient Operating Humdity	95℃ RH Max.
Shock Resistance	Mechanical durable: 1000m/s^2 min.
	Malfunction: 300m/s^2 min.
Vibration Frequency	Malfunction: 10 to 55HZ, 1.5mm double amplitude
Terminal Screw Torsional Force	6-8 kgf-cm
Other Screw Torsional Force	Cover 12-14 kgf-cm/Head 8-9 kgf-cm/Mounting 50-60 kgf/cm
Bare Wire Diameter	Φ2Max
Cable Diameter	Φ9 Max(IP 65 if use cable Φ8-9)

Appearance and dimension

CHL-5000

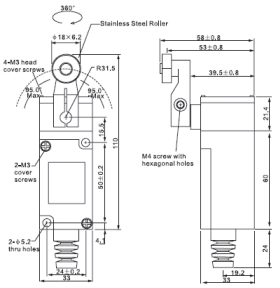

可选配尼龙滚轮 Nylon Roller LSN-5000P

CHL-5030

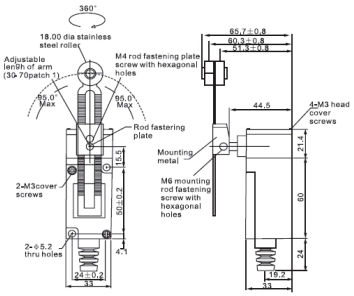

CHL-5050

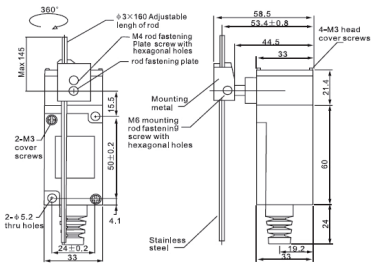

CHL-5100

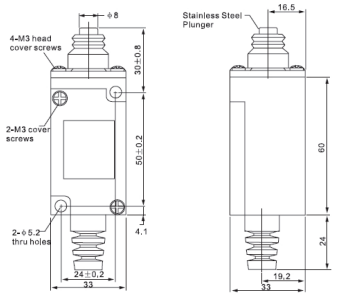

CHL-5200

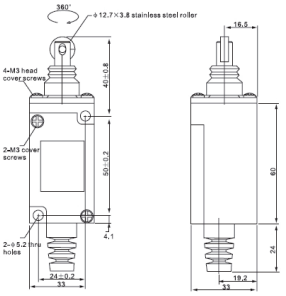

可转头方向成为 CHL-5220

CHL-5220

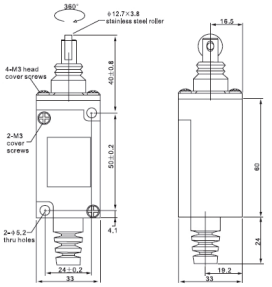

可转头方向成为 CHL-5200

CHL-5300

CHL-5330

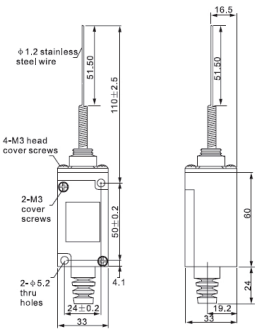

CHL-5381

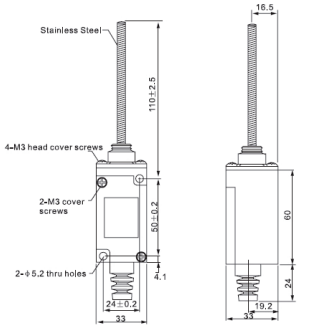

CHL-5391

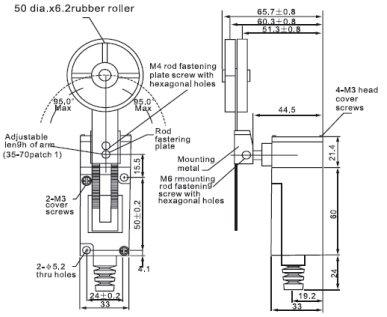

Limit Switchs

TZ-6 Sealed limit switch

Features

- Built-in CM miniature limit switch, strong aluminum cast shell, design for water-proof and oil-proof
- It is the same as CM micro switch in the rated value and characteristics
- Various of actuators that are taken convenience for using
- Each switch is equipped with cable fixator, including rubber boot,metallic washer, plastic screw nut

Contact Form

Operating characteristics

Models	TZ-6001	TZ-6002	TZ-6003	TZ-6004	TZ-6043
OF Max.	250~350g	250~350g		570g	570g
RF Min.	114g	114g		170g	170g
PT Max.	0.4mm	0.5mm		4mm	4mm
OT Min.	5.5mm	3.6mm		6mm	6mm
MD Max.	0.05mm	0.05mm		0.4mm	0.4mm
OP	38.2 0.8mm	49.7 1mm			

Models	TZ-6101	TZ-6102	TZ-6103	TZ-6104	TZ-6143
OF Max.	800g	500g		640g	640g
RF Min.	240g	100g		230g	230g
PT Max.	5mm	1mm		5mm	5mm
OT Min.	5mm	3.5mm		6mm	6mm
MD Max.	0.1mm	0.12mm		0.4mm	0.4mm
OP	45.8 0.8mm	49.7 0.8mm			

Appearance and dimension

TZ-6004

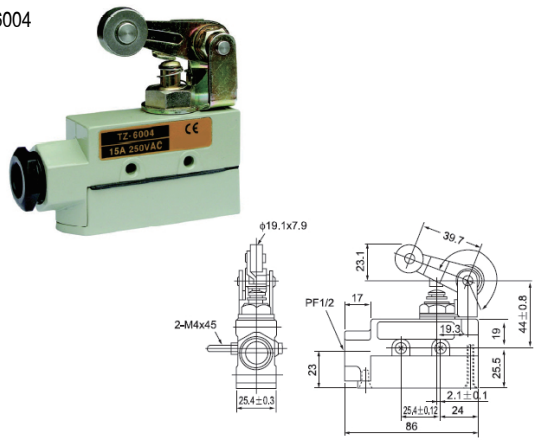

TZ-6104

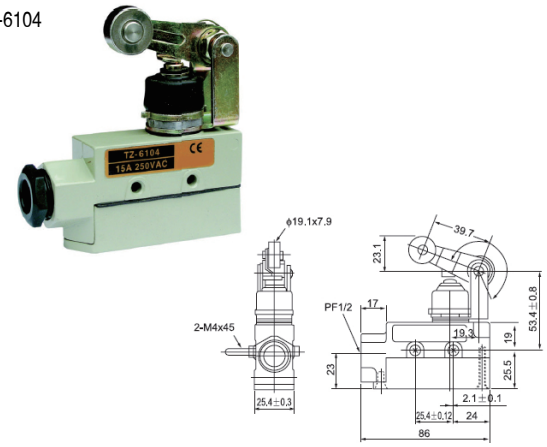

Appearance and dimension

TZ-6001

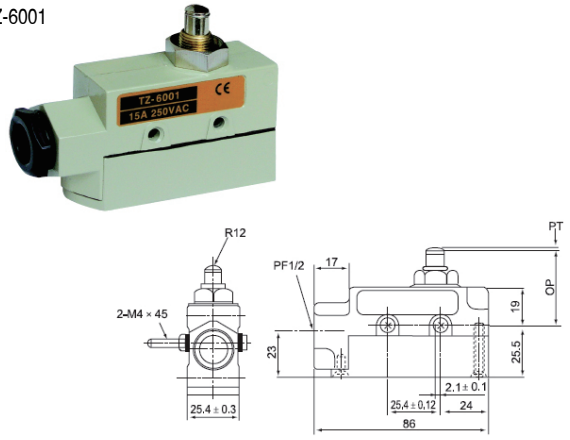

TZ-6002

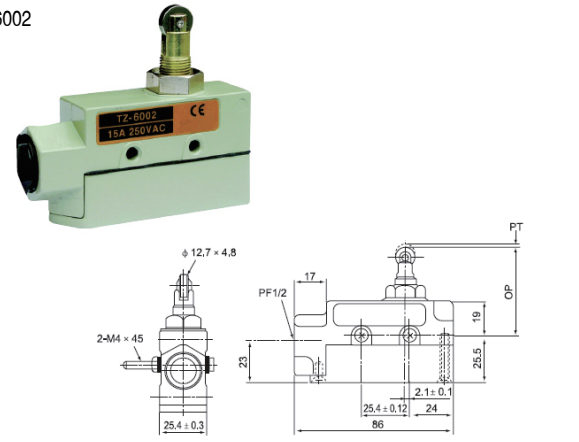

TZ-6101

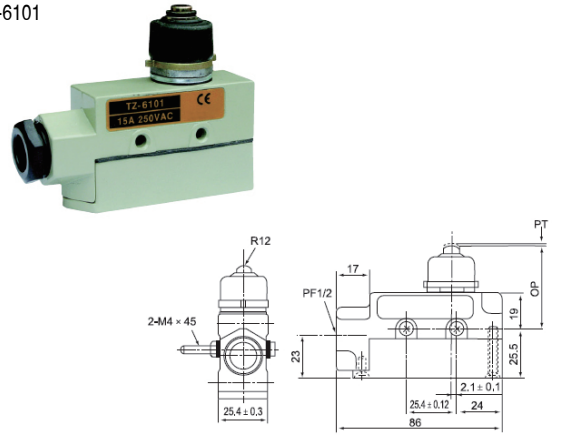

TZ-6102

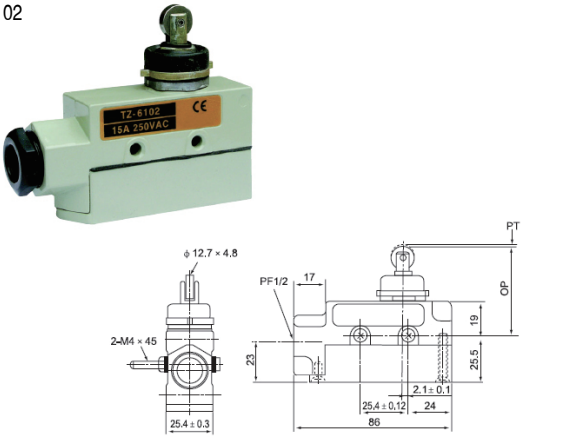

TZ-6143

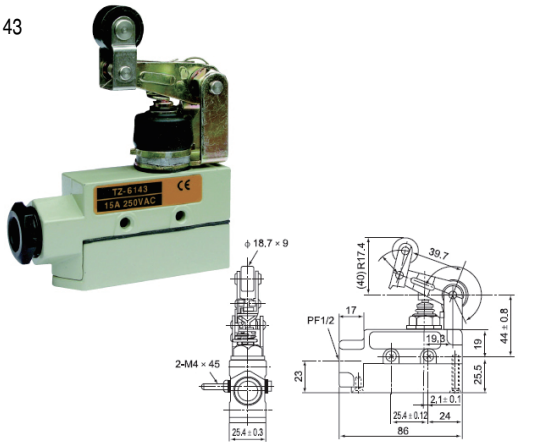

TZ-6106

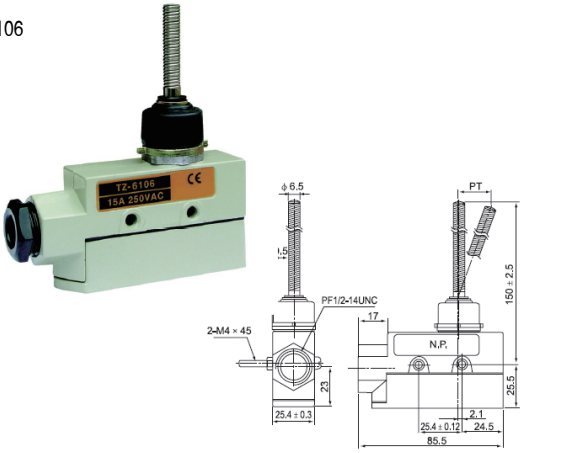

Limit Switchs

CZ-3 Compact Prewired Limit Switch

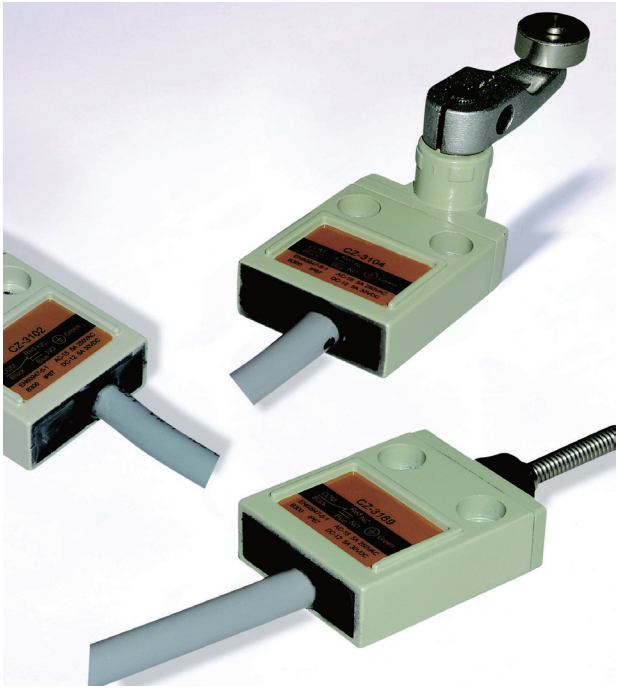

Specifications

- DPDS limit switch for multiple applications.
- Rugged aluminum alloy diecast housing
- High mechanical strength.
- Oil resistance,waterproof and dustproof structure.

Characteristics

Rating	5A 125V,3A 250VAC
Operation speed	1mm~1m/s
Operating frequency	Mechanical:120 operations/min.
	Electrical:30 operations/min.
Contact resistance	15mΩmax. (initial value)
Insulation resistance	100mΩmin. at 500VDC
Dielectric strength	1000VAC, 50/60 HZ for 1 minute between terminals of the same polarity
	1500VAC, 50/60 HZ for 1 minute between currentcarrying and non-current-carrying metal parts
	1500VAC, 50/60 HZ for 1 minute between each terminal and ground
Vibration	10-55HZ,1.5mm double amplitude
Shock	Mechanical durable: 1, 000m/Sec^2 (about 100G'S) Malfunction: 300m/Sec^2 (about 30G'S)
Ambient temperature	-10℃to +70℃
Humidity	Below 95%RH
Life	Mechanical: 10,000,000 operations above Electrical: 500,000 operations above
Degree of protection	IEC:IP67
Weight	Approx.360g(cable length 3m)
	Approx.540g(cable length 5m)

Ratings

Rated voltage	Noninductive Load(A)				Inductive Load(A)			
	Resistance Load		Lamp Load		Inductive Load		Motor Load	
	NC	NO	NC	NO	NC	NO	NC	NO
125VAC	5(0.1)		1.5	0.7	3		2.5	1.3
250VAC	3		1	0.5	2		1.5	0.8
8VDC	5(0.1)		2		5	4	3	
14VDC	5(0.1)		2		4	4	3	
30VDC	4(0.1)		2		3	3	3	
125VDC	0.4		0.05		0.4	0.4	0.05	
250VDC	0.2		0.03		0.2	0.2	0.03	

Operating characteristics

Models	CZ-3101	CZ-3102	CZ-3103	CZ-3104	CZ-3110	CZ-3111	CZ-3112	CZ-3113	CZ-3169
OF Max.	1200gf(11.77N)	1200gf(11.77N)	1200gf(11.77N)	580gf(5.69N)	1200gf(11.77N)	1800gf(17.65N)	1800gf(17.65N)	1800gf(17.65N)	150gf(1.47N)
RF Min.	450gf(4.41N)	450gf(4.41N)	450gf(4.41N)	150gf(1.47N)	450gf(4.41N)	450gf(4.41N)	450gf(4.41N)	50gf(4.41N)	-
PT Max.	1.8mm	1.8mm	1.8mm	25	1.8mm	1.8mm	1.8mm	1.8mm	15
OT Min.	3mm	3mm	3mm	40	3mm	3mm	3mm	3mm	-
MD Max.	0.2mm	0.2mm	0.2mm	3	0.2mm	0.2mm	0.2mm	0.2mm	-
OP	15.7±1mm	28.5±1mm	28.5±1mm	-	28.5±1mm	24.9±1mm	34.3±1mm	34.3±1mm	-

Appearance and dimension

CZ-3-B

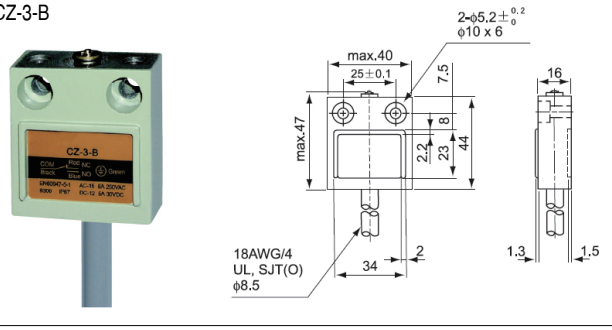

CZ-3101

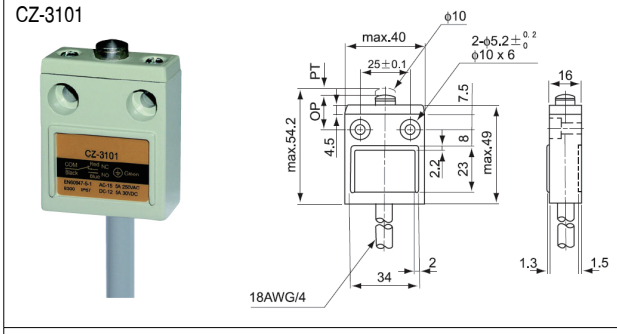

CZ-3102

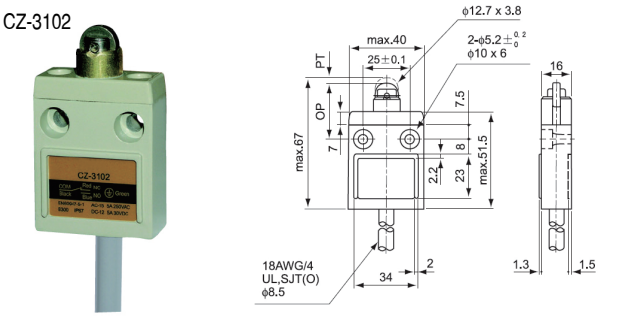

CZ-3103

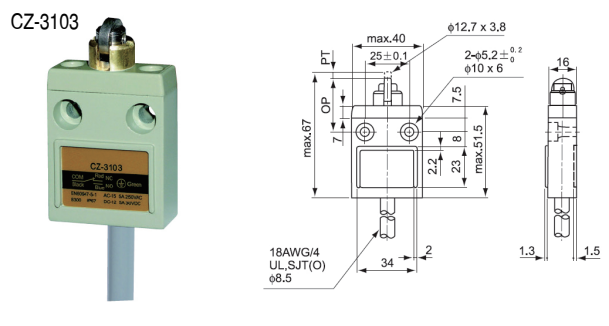

CZ-3110

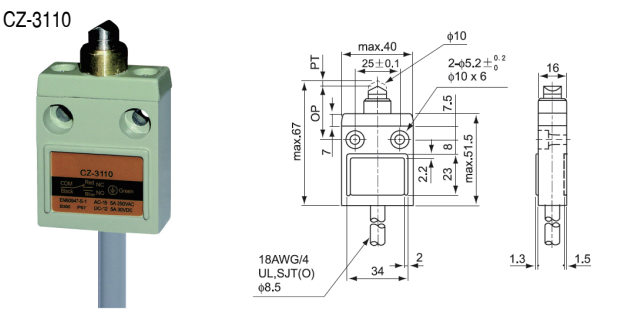

CZ-3111

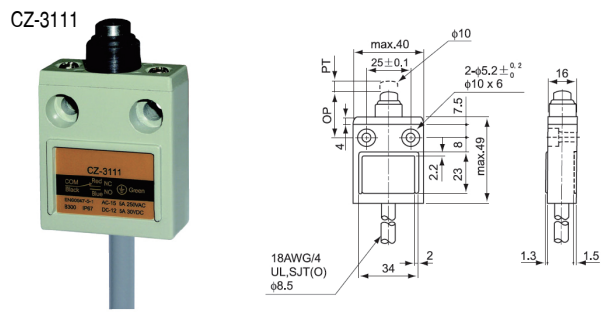

CZ-3112

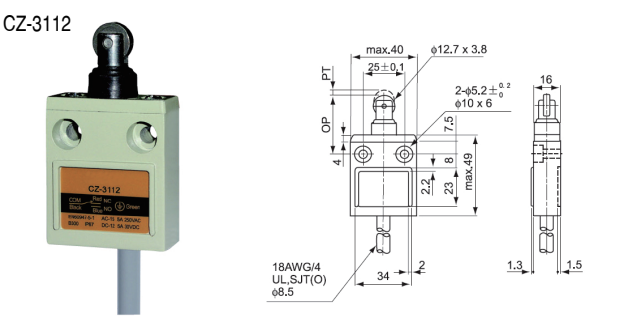

CZ-3113

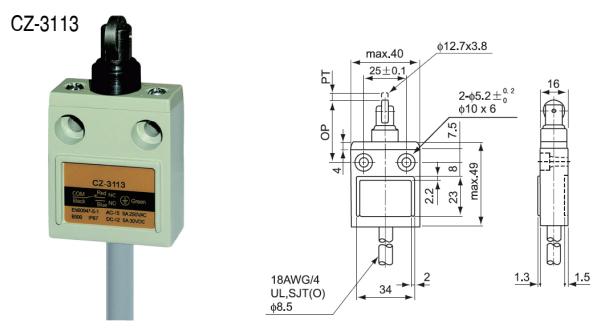

CZ-3104

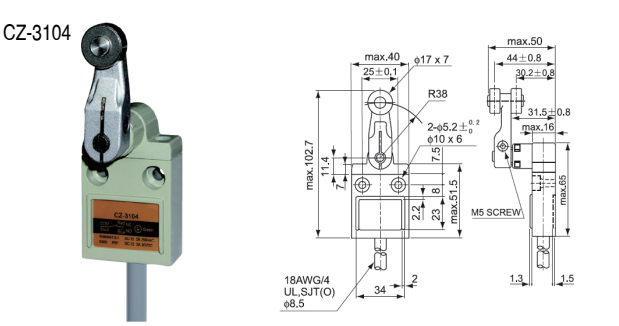

CZ-3169

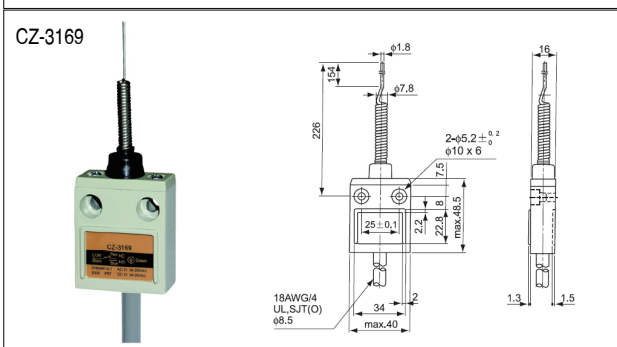

Fastening of the switch cable

The switch bodies are filled with resin for sealing purposes. To avoid stressing the cable and switch body, fasten the switch at 5 cmor farther away from the switch body, should the wire be bent, thebending radius shall be at least 45mm.

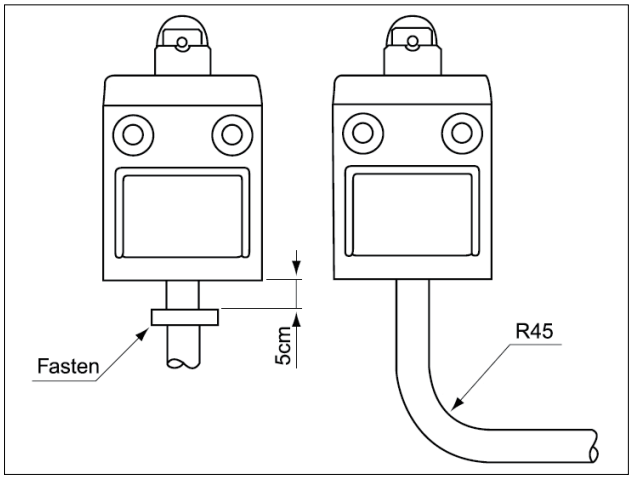

Installation

The service life and accuracy of switches will be effected by the shape of actuator operation frequency & over travel. So the angular of the fixing level should be about 30 , the surface finish of the fixing level should be over, the hardness is from HV400~500. When installing, the position of the concave part should be above the standard panel

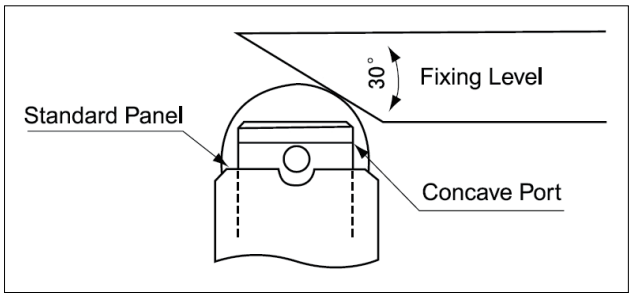

Contact types

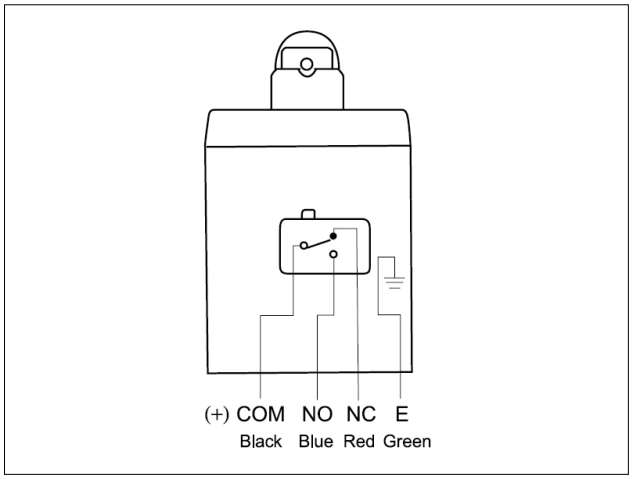

Switch bank mounting

A maximum of six switches may be mounted together as aswitch bank. During the installation,the convex part of the switch back.The mounting panel shall be 6mm or thicker.

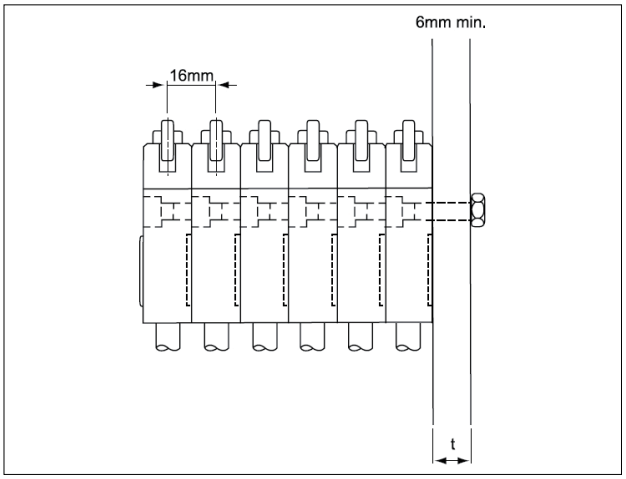

Mounting

Recommended tightening torque according to the follwing form.

Model	Screw type	Torque
1	M5 fastening screws	43.4~52lb.in(50~60kgf.cm)
2	M3.5 installing screws	6.9~7.9lb.in(8~9kgf.cm)

Mounting holes

Mount the switch body to a rigid mounting panel using two M5 screws.

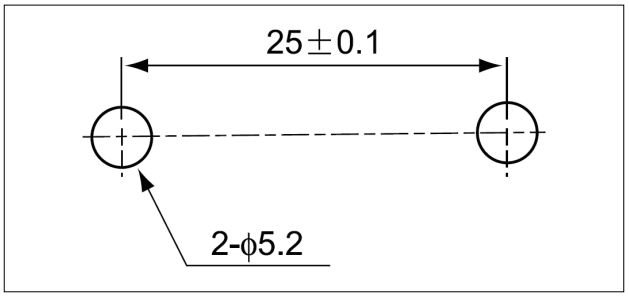

Limit Switchs

CZ-93 Safety Key Interlock Switch

Model designations

CZ-93	B	PG	01
①	②	③	④

Designation	Signal	Description
1.Type	CZ-93	Safety switch
2.Type of contact blocks fitted	B	2B(2NC)
	C	1A1B(NO-NC)
3.Conduit entries	PG	PG 13.5XP1.5
	PT	PT1/2X14UNC
4.Actuating keys	None	None
	01	Horizontal
	02	Vertical
	03	Adjustable

Contact Form

Rated voltage	Noninductive Load(A)				Inductive Load(A)			
	Resistance Load		Lamp Load		Inductive Load		Motor Load	
	NC	NO	NC	NO	NC	NO	NC	NO
125VAC	10		3	1.5	10		5	2.0
250VAC	10		2	1	5		3	1.0
400VAC	10		1.5	0.8	3		1.5	0.8
8VDC	10		6	3	10		6	
14VDC	10		6	3	10		6	
30VDC	6		4	3	6		4	
125VDC	0.8		0.2	0.2	0.8		0.2	
250VDC	0.4		0.1	0.1	0.4		0.1	

Characteristics

Rating	3A 240VAC (A300)
Operation speed	0.1m ~0.5m/s
Operating frequency	30 operations/minute
Contact resistance	25mΩmax. (initial value)
Insulation resistance	100mΩmin. at 500VDC
Rated insulationvoltage(UI)	400V
Dielectric strength	AC2500V/Umip 4KV
Vibration	10 to 55Hz, 0.65mm double amplitude
Shock	Mechanical: Approx. 1000m/s^2 (Approx. 100G'S)
	Electrical: Approx. 300m/s^2 (Approx. 30G'S)
Ambient temperature	-30℃to +70℃
Ambient Humidity	Blow 95RH
Life	Mechanical: 10,000,000 operations/min.
	Electrical: 150,000 operations/min.
Degree of protection	IP65(EN60947-5-1)
Short-circuit protective device	10A fuse
Weight	Approx. 76g

Use attention affair

To prevent the wear and the space should be within 1mm between the key and middle of the insert hole.

When in use,there should put a plate on the top to prevent the key overinsert. To prevent nonmovement ,the space between the plateand the switch should be under 3 mm.

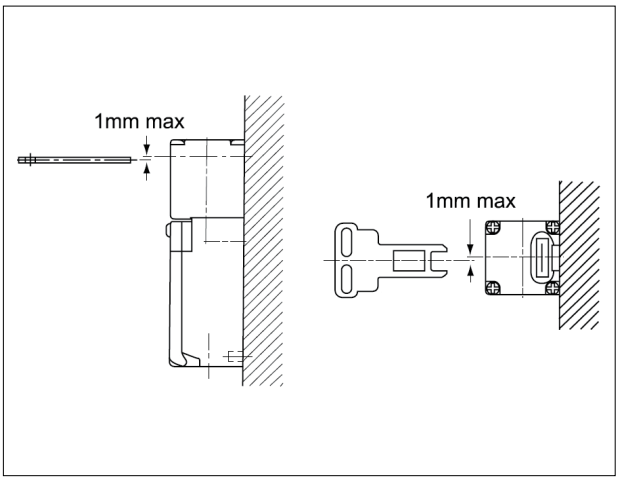

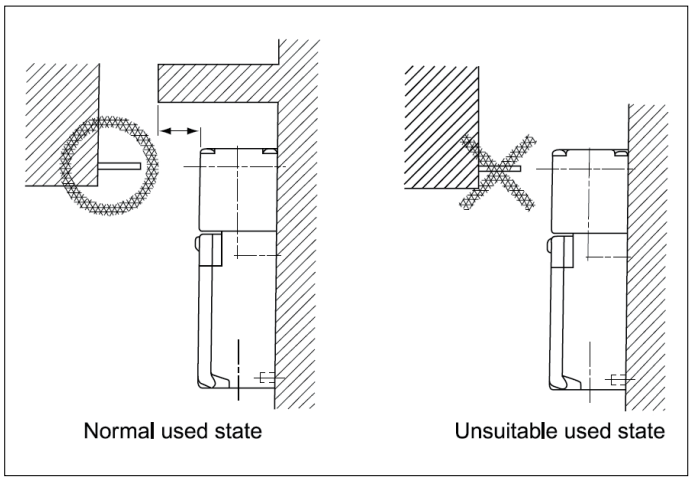

http://www.greegoo.com

CZ-93 Compact Prewired Limit Switch

Required to have positive machine

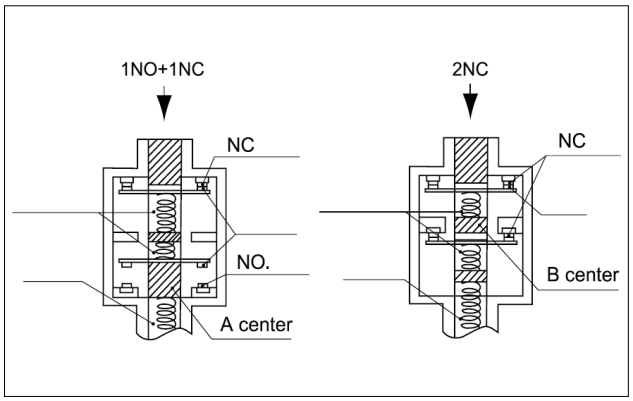

When in use,there should put a plate on the top to prevent the key overinsert.To prevent nonmovement ,the space between the plateand the switch should be under 3 mm.

CZ-93BPG BPT CPG CPT

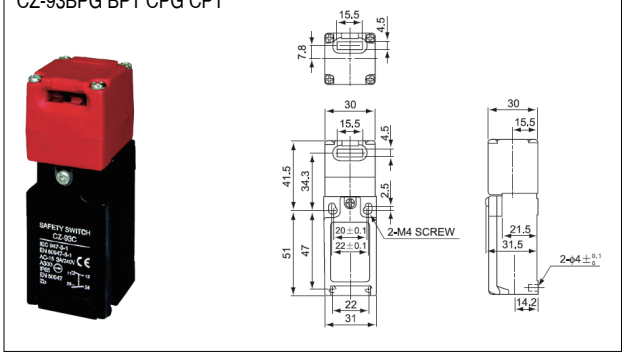

Operating characteristics

Key plug in force	max	147±N(1,500gf)
key pull out force	max	29±42N(3,000gf)
Pretravel		6±3mm
Total travel		(28mm)
Force required to have positive	min	58.84N(6,000gf)
Positive opening travel	min	10mm

Appearance and dimension

CZ-93BPG01 BPT01 CPG01 CPT01

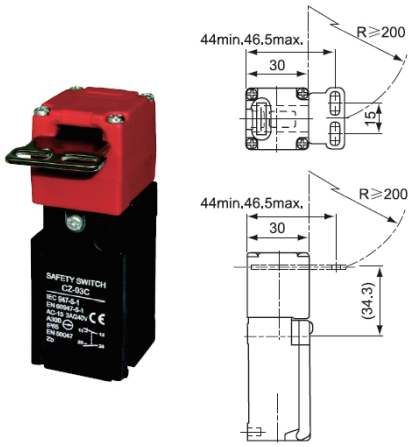

CZ-93BPG02 BPT02 CPG02 CPT02

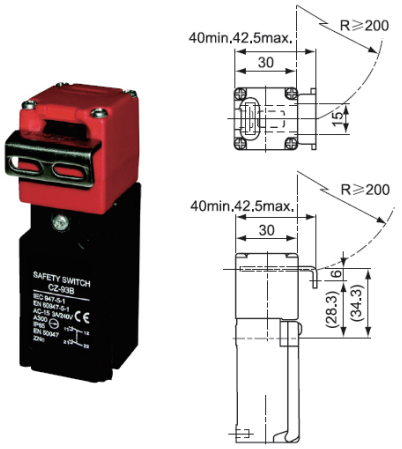

CZ-93BPG03 BPT03 CPG03 CPT03

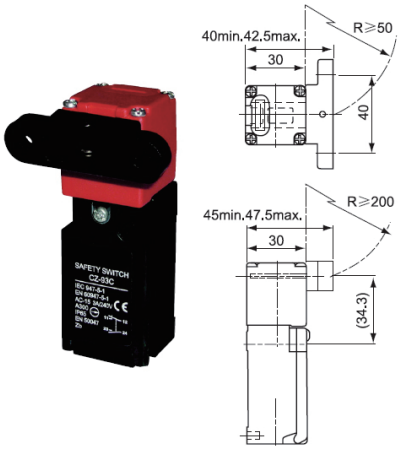

CZ93-K1

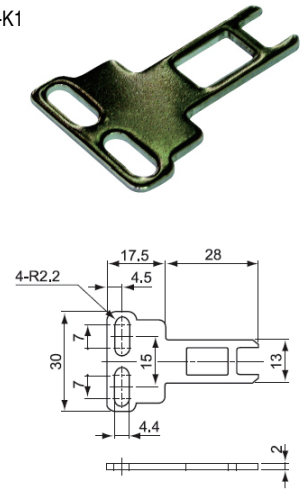

CZ93-K2

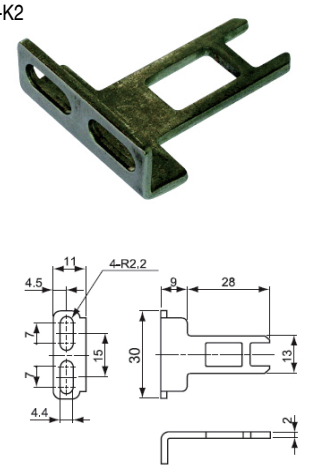

CZ93-K3

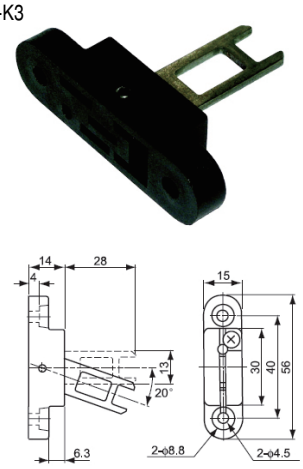

Limit Switchs

CZ-8 Limit Switch

特征 Features

- 双回路型限动开关
- 结构坚固，由锌合金及强化塑胶组成
- 体积小，可防水、防油
- 内藏微动开关有双簧片机构，机械寿命更长
- 具较大之OT动作
- 容易配线之导管设计
- 引动器种类多，方便使用
- 强制断开功能，可将接点强制推开，使回路切断。
- 接点采用24K镀金工艺。

- Double circuit type of limit switch
- Highly rigid construction, consists of intensive plastic and aluminum cast (Head and cover snugly fit in box)
- Small volume, water-proof and oil-proof construction
- Built-in basic switch with double spring mechanism, longer mechanical life
- Smooth operation with greater OT
- Easy-to-wire circuit opening design
- Wide varity of actuators, easily use

接点型式 Contact Form

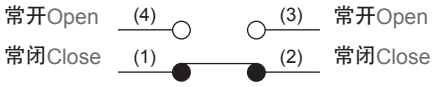

额定值 Ratings

额定电压 Rated voltage	非电感性负载 Noninductive Load (A)				电感性负载 Inductive Load (A)			
	电阻性负载 Resistance Load		灯泡负载 Lamp Load		电感性负载 Inductive Load		马达负载 Motor Load	
	NC	NO	NC	NO	NC	NO	NC	NO
125VAC	5	5	1.5	0.7	3	3	2	1
250VAC	5	5	1	0.5	3	3	1.5	0.8
8VDC	5	5	3	3	5	4	3	3
14VDC	5	5	3	3	4	4	3	3
30VDC	5	5	3	3	4	4	3	3
125VDC	0.4	0.4						
250VDC	0.2	0.2						
突入电流 Inrush Current	N.C.:24A以下、N.O.:12A以下 N.C: below 24A, N.O: below 12A							

注: 1、电感性负载之功率因素在0.4以上(AC)。时间常数在7msec以下(DC)。
2、灯泡负载之突入电流为稳定状态电流之10倍。马达负载之突入电流为稳定状态电 流之6倍。
3、带弹簧系列产品，操作体的使用范围为从弹簧的前端到弹簧全长的1/3以内。

NOTES: 1.Inductive load has a power factor of 0.4 min.(AC) and a time constant of 7 msec. max.(DC).
2.Lamp load has an inrush current of 10 times the steady-state current,while motor load has an inrush current of 6 times the steady-state current.
3.Product with spring, its usable range of operating part is within one third of the whole spring length from the front end of spring.

特性 Characteristics

操作速度 Operation speed	0.5mm至50cm/sec(锁住塞型) 0.5mm-50cm/sec
动作频率 Operating frequency	机械:120次/分 电气:30次/分 Mechanical: 120 operations/minute Electical: 30 operations/minute
接点电阻 Contact resistance	25mΩ(mm)(初期) 25mΩ max. (initial value)
绝缘电阻 Insulation resistance	100MΩ以上(在500VDC下) 100mΩ min. (below 500VDC)
电介强度 Dielectric strength	非连续端子间1,000VAC, 50/60Hz持续1分钟 1000VAC, 50/60 Hz for 1 minute between terminals of the same polarity
	载电流与无载电流零件间1,500VAC, 50/60Hz持续1分钟 1500VAC, 50/60 Hz for 1 minute between current-carrying and non-current-carrying metal parts
	端子和接地之间1,500VAC, 50/60Hz持续1分钟 1500VAC, 50/60 Hz for 1 minute between each terminal and ground
振动 Vibration	10至55Hz, 1.5mm双振幅 10-55Hz,1.5mm double amplitude
冲击 Shock	机械耐久:1,000m/Sec^2(约100G′ S) 误动作耐久:300m/Sec^2(约30G′ S) Mechanical durable: 1, 000m/Sec^2 (about 100G'S) Malfunction: 300m/Sec^2 (about 30G'S)
周围温度 Ambient temperature	使用时:-5~+65℃ (没有结冰With no icing)
湿度Humidity	95%RH以下 <95% RH
使用寿命 Life	机械:10,000,000次以上 电气:500,000次以上 Mechanical: 10,000,000 operations above Electrical: 500,000 operations above
重量Weight	约130至190g About 130 to 190g
保护构造 Degree of protection	IP65

动作特性 Operating Characteristics

型号Models	CZ-8104	CZ-8108	CZ-8107	CZ-8111	CZ-8112/8122	CZ-8166/8167/8168/8169
OF最大(Max.)	750g	750g	750g	900g	900g	150g
RF最小(Min.)	100g	100g	100g	150g	150g	-
PT最大(Max.)	20°	20°	20°	1.5mm	1.5mm	30mm
OT最小(Min.)	50°	50°	50°	4mm	4mm	-
MD最大(Max.)	12°	12°	12°	1mm	1mm	-
OP	-	-	-	26±0.8mm	37±0.8mm	-

http://www.greegoo.com

外观和尺寸 Appearance and Dimension

CZ-8104

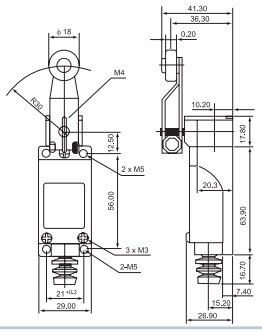

可选配不锈钢滚轮
Optional Stainless steel idler wheel

CZ-8108

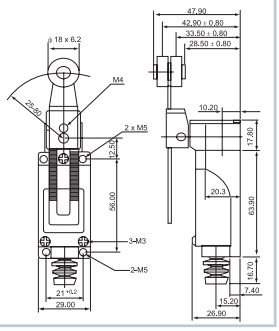

可选配不锈钢滚轮
Optional Stainless steel idler wheel

CZ-8107

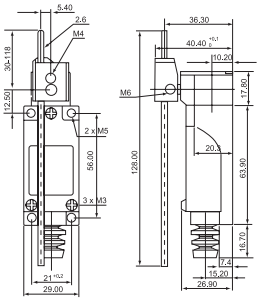

CZ-8112

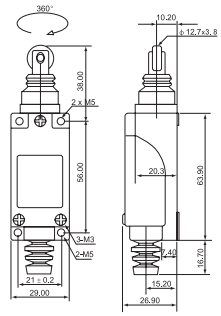

CZ-8111

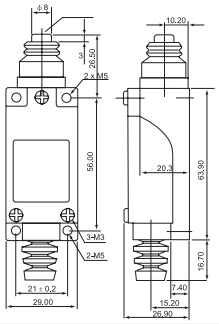

CZ-8122

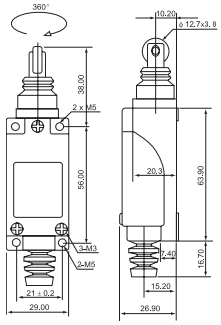

CZ-8166

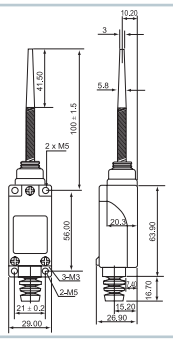

CZ-8167

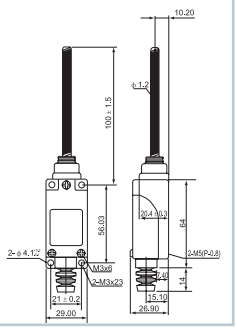

CZ-8168

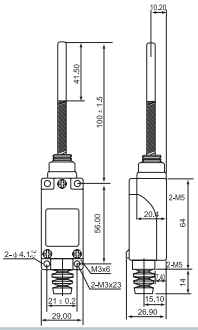
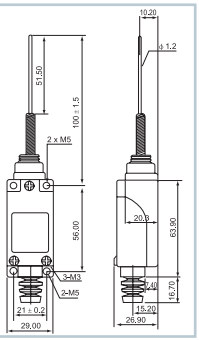
CZ-8169