01

Preliminary Understanding of the Single Phase Rectifier Voltage Regulation Module and Its Applications:

1.The single phase rectifier voltage regulation module operates on the principle of a bridge rectifier circuit, allowing convenient adjustment of the output voltage RMS value by controlling the thyristor conduction phase. It is widely used across various industries and applications, such as temperature control, dimming, and DC motor speed regulation.

2.The module supports fully compatible input automatic control modes, including 0-5VDC, 0-10VDC, and 4-20mA, and can also be manually controlled. It features a wide input adjustment range, high output regulation accuracy, and strong anti-interference capability. There is no instantaneous inrush output upon power-on.



The meanings of the numbers and symbols in the module model:

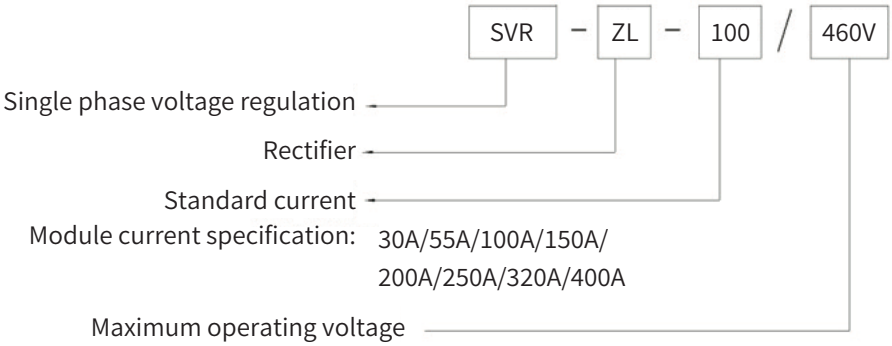

Module Application Wiring and Internal Diagram:

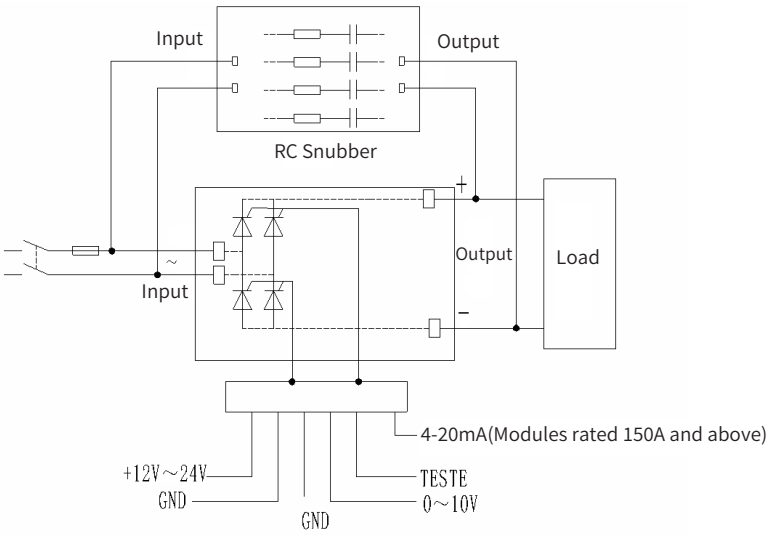

Module Protection Methods:

I. Overcurrent Protection

For overcurrent protection, the use of external fast-acting fuses is generally recommended. However, while fast-acting fuses are highly effective against overcurrent caused by short-circuit protection, they do not provide adequate protection against general overcurrent. This is because a current twice the rated value of the fast-acting fuse may take several seconds to blow the fuse. For better protection, it is advisable to use fast-acting fuses in combination with modules featuring built-in overcurrent protection or external control boards with overcurrent protection functionality.

http://www.greegoo.com
Peter@greegoo.com

i. Wiring Method for Fast-Acting Fuses: Connect the fuses in series at the AC input terminals of the module. For single phase modules, one fuse is required.
ii. Parameter Selection for Fast-Acting Fuses:
a. The rated voltage should exceed the circuit's operating voltage.
b. The rated current of the fuse is generally set at 70% to 80% of the load current.

II. Overvoltage Protection

For overvoltage protection of the module, the use of an RC snubber is recommended.
The RC snubber circuit can effectively suppress overvoltage generated when the thyristor switches from the conducting state to the blocking state, thereby preventing thyristor breakdown.
Wiring Method: The RC snubber circuit should be connected in parallel across each thyristor chip in the module. For anti-parallel chips, one set of RC snubbers can be shared. (Refer to the module's main wiring diagram for connection details.)

Module Selection

(1) Relationship Between Conduction Angle and Module Output Current

There is a direct correlation between the conduction angle of the module and its maximum achievable output current. The rated current of the module is defined as the maximum output current at the maximum conduction angle. When operating at a small conduction angle (where the ratio of output voltage to input voltage is very low), the output current consists of sharp, narrow pulses. While instruments may display a low current value (DC instruments typically show the average value, and AC instruments often underreport the actual value when measuring non-sinusoidal currents), the RMS value of the output current is actually very high.
Since the heating of semiconductor devices is proportional to the square of the RMS current, operation at small conduction angles can cause severe overheating of the module, potentially leading to failure. Therefore, the module should be operated at a conduction angle greater than 65% of the maximum conduction angle.

(2) Method for Selecting Module Current Rating

Considering that thyristor products typically handle non-sinusoidal currents, involve conduction angle issues, and face fluctuating and unstable load currents—combined with the relatively poor current surge withstand capability of thyristor chips—it is essential to incorporate a certain safety margin when selecting the module current rating. The recommended selection method is as follows:

$$I > K \cdot I_{load} \cdot U_{max} / U_{actual}$$

K: Safety factor, Resistive load: K=1.5, Inductive load: K=2
I load: Maximum current flowing through the load
U actual: Minimum voltage across the load
U max: Maximum output voltage of the module (For single phase rectifier modules: Input voltage×0.9)
I : Minimum current rating of the module to be selected. The rated current of the module must be greater than this value.

Example: A system uses a single-phase rectifier module in an eddy current braking control system, with a 380V input, 90A output current, and an adjustable DC output voltage of 200–300V. What module model should be selected?
Selection method: Single phase rectifier module with 380V input. Maximum output DC voltage: 380×0.9=342V. Eddy current braking is an inductive load, so 2×90×342/200=307.8A
A 400A module can be selected, model: SVR-ZL-400.

Input Parameters	Control Power Supply	12~24V
	Input Voltage Control	0-10V
	Input Current Control (Optional)	4-20mA
	Potentiometer Control	10K/2W
Output Parameters	Operating Voltage	150~460V
	Mains Frequency	50HZ/60HZ
	Rate of Rise of Off-State Voltage	500V/μS
	Critical Rate of Rise of On-State Current	100A/μS
	Maximum Turn-Off Delay	<10ms
	Output Voltage Asymmetry	<2%
	Output Voltage Instability	＜0.5%
Other Parameters	Operating Ambient Temperature	-25°C~45°C
	Dielectric Withstand Strength	⩾1800V

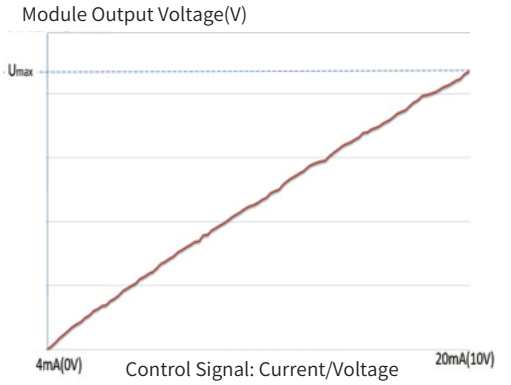

Note: When the module is connected to a resistive load, the output voltage of the module exhibits a linear proportional relationship with the control signal. The module features linear compensation functionality.

Module Control Port and Control Cables

Case code
G-51/G-59
5-Pin Control Port:

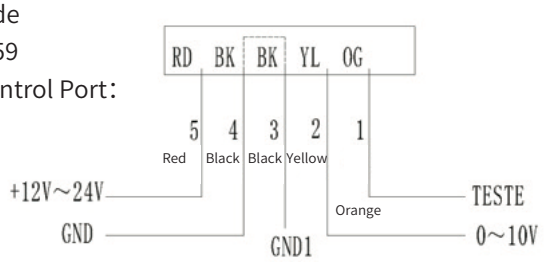

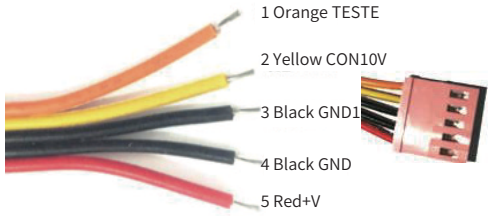

Case code
G-73
9-Pin Control Port:

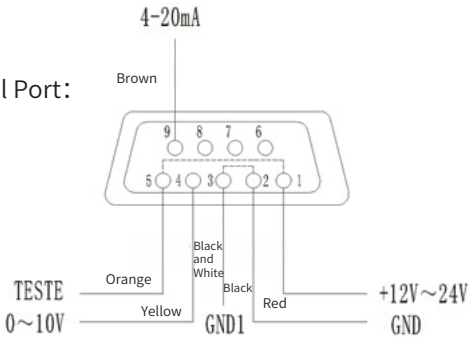

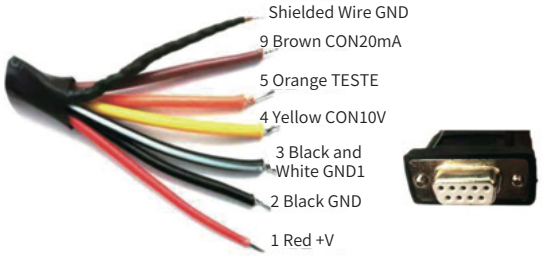

Case code
G-105/G-135
15-Pin Control Port:

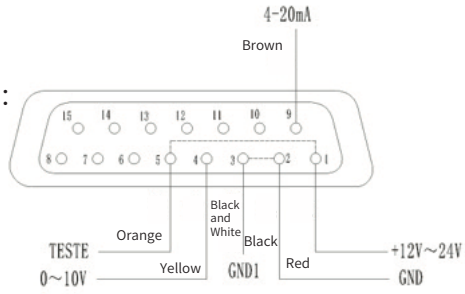

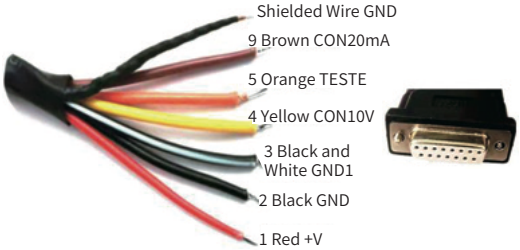

http://www.greegoo.com
Peter@greegoo.com

Module Fixing and Installation:

(1) Assemble the heat sink and cooling fan in a suitable location within the chassis according to ventilation requirements.
(2) Evenly apply a layer of thermal grease to both the surface of the module's thermal base plate and the heat sink. Then, secure the module to the heat sink using four screws. Do not tighten the screws completely at once; instead, tighten them sequentially and evenly in several passes until firmly fastened, ensuring close contact between the module's base plate and the heat sink surface.
(3) Use terminal lugs to tightly bind the copper wires, preferably by tinning them. Then, cover with insulating heat-shrink tubing and shrink it using hot air or hot water. Secure the terminal lugs to the module electrodes, maintaining good surface pressure contact. It is strictly prohibited to directly crimp bare copper wires to the module electrodes.
(4) The module must be equipped with a heat sink and cooling fan during normal operation. It is recommended to use the matched heat sink and fan provided by the manufacturer. During operation, ensure that the temperature of the heat sink base plate does not exceed 75°C.

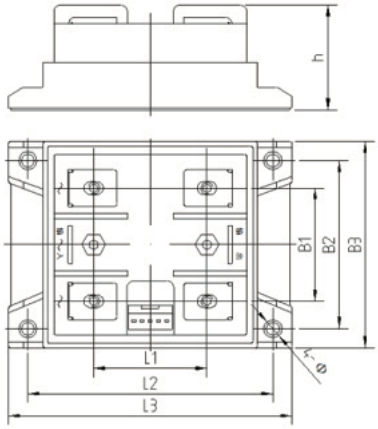

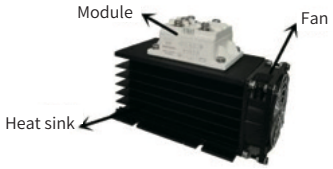

The table below shows the dimensions:

Value / Code / Model	L_1	L_2	L_3	B_1	B_2	B_3	h	4-Φ	Weight (kg)	Case code	Indicator
SVR-ZL-30	32	78	94	26	38	51	40	5.5	0.17	G-51	✓
SVR-ZL-55											✓
SVR-ZL-100	32	78	93.5	30	46	59	40	5.5	0.35	G-59	✓
SVR-ZL-150	45.2	102	118	39	58	73	41	6.2	0.48	G-73	
SVR-ZL-200											
SVR-ZL-250	60	126	145	58	86	105	53	7	1.0	G-105	
SVR-ZL-320											
SVR-ZL-400	74	160	186	74	110	135	66	8.5	4.0	G-135	

Module Fixing and Installation:

LED Light	Phenomenon	Cause
Power Indicator	Red Light On	Control power is present
Status Indicator	Red Light Blinking	No input to the module
	Red Light On	Normal operation
	Red Light Off	No output from the module

http://www.greegoo.com
Peter@greegoo.com

The following diagram shows the dimensions:

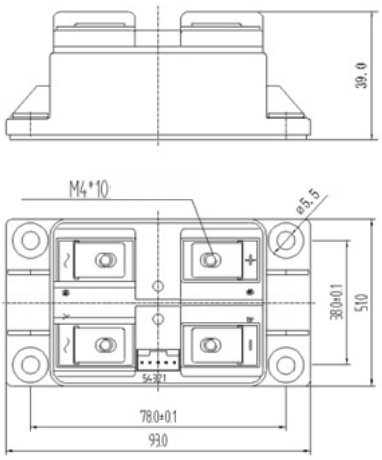

G-51

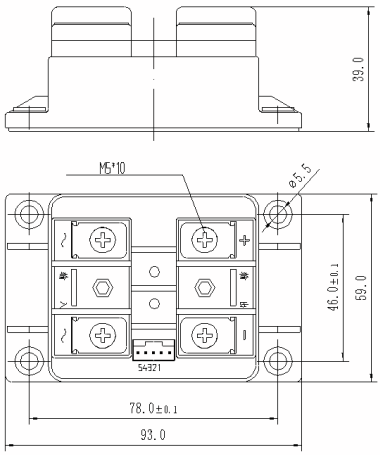

G-59

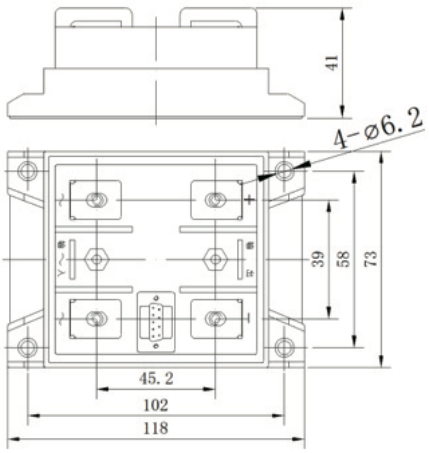

G-73

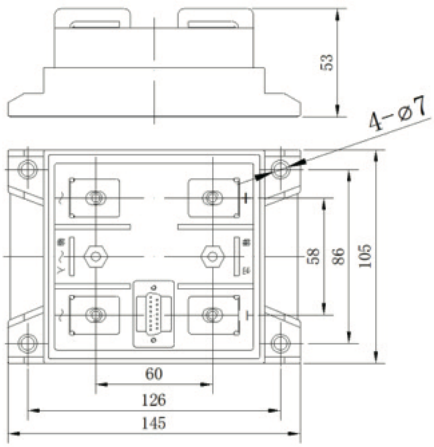

G-105

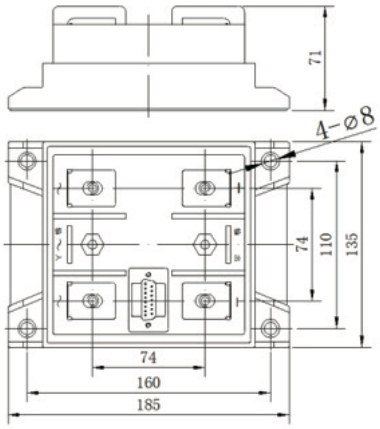

G-135

General parameters of the module:

(1) Output voltage asymmetry: <2%

(2) Output voltage instability: <0.5%

(3) Multiple trigger pulse modes suitable for different application scenarios

(4) Special resistance synchronization circuit with single phase self-adaptation, offering significantly higher reliability and stability than transformer synchronization methods

(5) Specially optimized for inductive loads, suitable for various no-load, light-load, and heavy-load inductive applications

Key Parameters of Internal Thyristor Chips:

(1) Peak forward and reverse blocking voltage: ⩾1400V

(2) di/dt: 100A/μs

(3) dv/dt: 500V/μs

Module Operating Environment Requirements:

(1) Ambient temperature range: -25°C to +45°C

(2) The module should be installed in a dry, well-ventilated area, away from heat sources, dust, corrosive liquids, and gases.

Selection of Heat Sink:

Heat Sink Dimension Schematic Diagram（mm）	Heat Sink Cutting Length (mm)	Single Phase Rectifier Module Model	Corresponding Matching RC Snubber Board
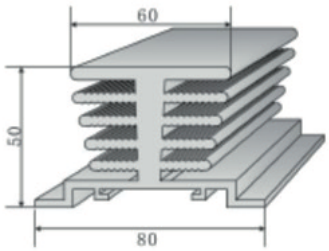	120	SVR-ZL-30	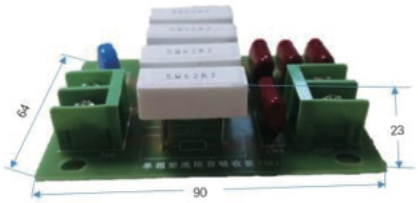
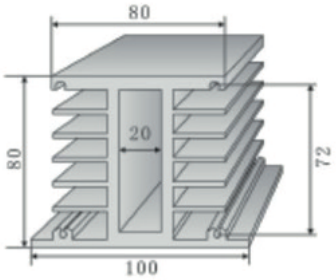	120	SVR-ZL-55	
	154	SVR-ZL-100	
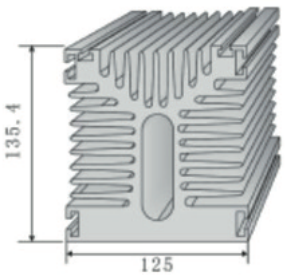	200	SVR-ZL-150	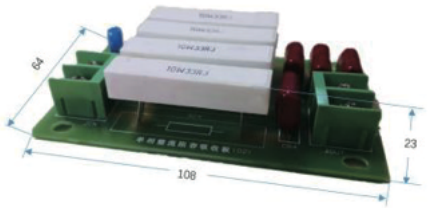
		SVR-ZL-200	
	220	SVR-ZL-320	
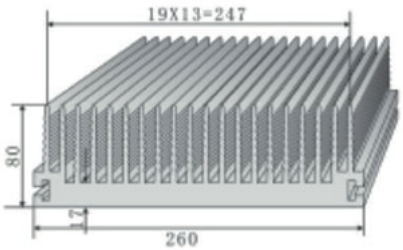	300	SVR-ZL-400	